Department of Defense

MANUAL

NUMBER 4160.28, Volume 3
June 7, 2011
Incorporating Change 2, August 31, 2018

USD(A&S)

SUBJECT: Defense Demilitarization: Procedural Guidance

References: See Enclosure 1

1. PURPOSE

a. Manual. This Manual is composed of several volumes, each containing its own purpose. In accordance with the authority in DoD Directive (DoDD) 5134.01 (Reference (a)) and Deputy Secretary of Defense Memorandum (Reference (af)) and DoDD 5134.12 (Reference (b)), this Manual implements the policy in DoD Instruction (DoDI) 4160.28 (Reference (c)), assigns responsibilities, and provides procedures for assessing demilitarization (DEMIL) requirements and performing physical DEMIL of DoD personal property.

b. Volume. This Volume:

(1) Provides procedural guidance for DEMIL of DoD personal property and related disposition prior to release from DoD control including certification and verification.

(2) Incorporates applicable portions of DoD 4160.21-M-1 (Reference (d)).

2. APPLICABILITY. This Volume applies to OSD, the Military Departments, the Office of the Chairman of the Joint Chiefs of Staff and the Joint Staff, the Combatant Commands, the Office of the Inspector General of the Department of Defense, the Defense Agencies, the DoD Field Activities, and all other organizational entities in the DoD (hereinafter referred to collectively as the "DoD Components").

3. DEFINITIONS. See Glossary.

4. RESPONSIBILITIES. See Enclosure 2.

5. PROCEDURES. Enclosure 3 provides procedures for the physical DEMIL of DoD personal property and Enclosure 4 provides related disposition procedures.

6. RELEASABILITY. **Cleared for public release.** This Volume is available on the Directives Division Website at http://www.esd.whs.mil/DD/.

7. SUMMARY OF CHANGE 2. This change reassigns the office of primary responsibility for this Volume to the Under Secretary of Defense for Acquisition and Sustainment in accordance with the July 13, 2018 Deputy Secretary of Defense Memorandum (Reference (ag)).

8. EFFECTIVE DATE. This Volume is effective June 7, 2011.

Alan F. Estevez
Performing the duties of the
Assistant Secretary of Defense for
Logistics and Materiel Readiness

Enclosures
1. References
2. Responsibilities
3. Physical DEMIL
4. Disposition

Glossary

TABLE OF CONTENTS

ENCLOSURE 1: REFERENCES 5

ENCLOSURE 2: RESPONSIBILITIES 7

DIRECTOR, DEFENSE LOGISTICS AGENCY (DLA) 7
DIRECTOR, DEFENSE SECURITY COOPERATION AGENCY (DSCA) 7
HEADS OF THE DOD COMPONENTS 7

ENCLOSURE 3: PHYSICAL DEMIL 8

INTRODUCTION 8
DEMIL METHOD 8
DEMIL PROCEDURES 9
RESIDUAL MATERIALS 9
DEMANUFACTURING OF MILITARY ELECTRONICS 10
CERTIFICATION OF DEMIL 10

APPENDIX: METHOD AND DEGREE OF DEMIL 13

ENCLOSURE 4: DISPOSITION 45

INTRODUCTION 45
REPORTING EXCESS PROPERTY 45
TYPES OF DISPOSITION 48
EXCHANGE AND/OR SALE OF DOD PERSONAL PROPERTY 49
SPECIAL PROGRAMS 50
MATERIAL WITHOUT A NATIONAL STOCK NUMBER (NSN) 50

APPENDIX: PROPERTY REQUIRING SPECIAL PROCESSING 51

GLOSSARY 58

PART I. ABBREVIATIONS AND ACRONYMS 58
PART II. DEFINITIONS 59

FIGURES

1. Sample Format of a DEMIL Certificate 11
2. Sample Format of a Declassification Certificate 12
3. Machine Gun with Tripod 13
4. 7.62mm Coaxial Machine Gun 13
5. Assault Rifle 14
6. Machine Gun Tripod Mount 15

7. Breechring and Sliding Breechblock 16
8. Interrupted Thread Breechblock 16
9. 20mm Gun 17
10. Artillery Tube....18
11. Mortar Tube 18
12. Hydropneumatic Recoil Mechanism....19
13. Nitrogen Cylinder 20
14. Recoil Rod 21
15. Hydropneumatic Equilibrator 21
16. Spring-Type Equilibrator....22
17. Concentric Recoil Mechanism-Type Cannon....22
18. Concentric Recoil Mechanism-Type Gun Launcher 23
19. 40mm Grenade Launcher, M203 25
20. 40mm Automatic Grenade Launcher, Mk19 26
21. Rocket Launcher 26
22. 5”/62 Naval Gun Mount....28
23. Tank, Combat, Full Tracked 29
24. Personnel Carriers....30
25. Tank Recovery Vehicles....30
26. Grenade Projector Mounts 31
27. Up-Armored Truck 32
28. 7.62mm Machine Gun – 40mm Grenade Launcher Helicopter Armament Subsystem ...34
29. Single Engine Aircraft 34
30. Multi-Engine Aircraft 35
31. Attack Helicopter....35
32. Aircraft Pylons and Pylon Parts....36
33. Aviation Combined Arms Tactical Trainer 37
34. Rifle Marksmanship Trainer Weaponeer....37
35. Specialized Camouflage Netting....40
36. Satellite Signals Navigation Set....41
37. Interim Ground Station Module....42
38. Sample Format of a Material Documented As Safe (MDAS) Certificate 46
39. Sample Format of an Inert Certificate 47

ENCLOSURE 1

REFERENCES

(a) DoD Directive 5134.01, "Under Secretary of Defense for Acquisition, Technology, and Logistics (USD(AT&L))," December 9, 2005, as amended
(b) DoD Directive 5134.12, "Assistant Secretary of Defense for Logistics and Materiel Readiness (ASD(L&MR))," May 25, 2000, as amended
(c) DoD Instruction 4160.28, "DoD Demilitarization Program," April 7, 2011
(d) DoD 4160.21-M-1, "Defense Demilitarization Manual," October 21, 1991 (cancelled by Volume 1 of this Manual)
(e) DoD Directive 5105.65, "Defense Security Cooperation Agency (SCA)", October 26, 2012
(f) DoD Manual 4160.21, "Defense Materiel Disposition: Disposal Guidance and Procedures," dates vary by volume
(g) DoD Directive 5160.65, "Single Manager for Conventional Ammunition (SMCA)," August 1, 2008
(h) Sections 2576, 2576a, and 7306 of title 10, United States Code
(i) Title 48, Code of Federal Regulations
(j) Subpart 245.6 of Defense Federal Acquisition Regulation Supplement (DFARS), current edition
(k) Parts 730 through 774 of title 15, Code of Federal Regulations
(l) DoD Instruction 5015.02, "DoD Records Management Program," February 24, 2015, as amended
(m) DoD Instruction 4140.62, "Material Potentially Presenting an Explosive Hazard," August 20, 2015, as amended
(n) DoD Instruction 5160.68, "Single Manager for Conventional Ammunition (SMCA): Responsibilities of the SMCA, the Military Services, and United States Special Operations Command (USSOCOM)," December 29, 2008
(o) DoD Manual 4140.01, "DoD Supply Chain Materiel Management Procedures," dates vary by volume
(p) Defense Logistics Manual 4000.25-1, "Military Standard Requisitioning and Issue Procedures (MILSTRIP)", June 13, 2012
(q) DoD Instruction 2030.08, "Implementation of Trade Security Controls (TSC) for Transfers of DoD Personal Property to Parties Outside DoD Control," February 19, 2015, as amended
(r) DoD Instruction 4140.01, "DoD Supply Chain Materiel Management Policy," December 14, 2011, as amended
(s) Parts 101 and 102 of title 41 Code of Federal Regulations
(t) DoD Manual 4100.39, "Federal Logistics Information System (FLIS) Procedures," March 8, 2017, as amended
(u) DoD Instruction 5030.59, "National Geospatial-Intelligence Agency (NGA) Limited Distribution Geospatial Intelligence (GEOINT)," March 10, 2015
(v) DoD 4715.6-R, "Low-Level Radioactive Waste Disposal Program," January 17, 2001

(w) Under Secretary of Defense for Acquisition, Technology, and Logistics Memorandum, "Nuclear Weapons Related Materiel (NWRM)," October 16, 2008[1]
(x) DoD Manual 5100.76, "Physical Security of Sensitive Conventional Arms, Ammunition, and Explosives (AA&E)," April 17, 2012
(y) Section 53 of title 26, United States Code
(z) Defense Transportation Regulation 4500.9-R, "Defense Transportation Regulation Part II Cargo Movement," current edition
(aa) Defense Logistics Manual 4000.25-2, "Military Standard Transaction Reporting and Accountability Procedures (MILSTRAP)", June 13, 2012
(ab) Part 478 of title 27, Code of Federal Regulations
(ac) DoD 6055.09-M, "DoD Ammunition and Explosives Safety Standards," dates vary by volume
(ad) Office of the Chairman of the Joint Chiefs of Staff, "DoD Dictionary of Military and Associated Terms," current edition
(ae) Parts 120-130 of title 22, Code of Federal Regulations
(af) Deputy Secretary of Defense Memorandum, "Implementation Guidance for the Establishment of the Office of the Under Secretary of Defense for Research and Engineering and the Office of the Under Secretary of Defense for Acquisition and Sustainment," January 31, 2018
(ag) Deputy Secretary of Defense Memorandum, "Establishment of the Office of the Under Secretary of Defense for Research and Engineering and the Office of the Under Secretary of Defense for Acquisition and Sustainment," July 13, 2018

[1]Available at http://www.acq.osd.mil/dpap/pdi/uid/attachments/USA001484-08_signed.pdf

ENCLOSURE 2

RESPONSIBILITIES

1. DIRECTOR, DEFENSE LOGISTICS AGENCY (DLA). The Director, DLA, under the authority, direction, and control of the Under Secretary of Defense for Acquisition and Sustainment and in addition to the responsibilities in section 4 of this enclosure, shall:

a. Provide guidelines for the identification and DEMIL of DoD personal property to prevent its unauthorized use and the potential compromise of U.S. national security.

b. Maintain centralized DEMIL centers within the DLA Disposition Services to perform required physical DEMIL.

2. DIRECTOR, DEFENSE SECURITY COOPERATION AGENCY (DSCA). The Director, DSCA, under the authority, direction, and control of the Under Secretary of Defense for Policy, for DoD personal property provided under security assistance programs in accordance with DoDD 5105.65 (Reference (e)), and in addition to the responsibilities in section 4 of this enclosure, shall assist Security Cooperation Organizations (SCO) in responding to issues associated with DEMIL requirements and, as necessary on a case-by-case basis, support SCO supervision of approved DEMIL performance.

3. HEADS OF THE DoD COMPONENTS. The Heads of the DoD Components shall:

a. Perform physical DEMIL of DoD personal property within their respective Component as soon as practical after the property is determined not to be required within the DoD.

b. Administer DEMIL requirements as provided for in terms and conditions of assigned contracts.

ENCLOSURE 3

PHYSICAL DEMIL

1. INTRODUCTION. This enclosure contains information on selecting the method and degree of DEMIL, performance considerations, and certification and verification requirements for DoD personal property. DLA Disposition Services sites, DoD Components, and the Military Services have the capability to perform DEMIL for select items. See DoD Manual 4160.21(Reference (f)) for the process of turning in DEMIL required items to DLA Disposition Services site. Available services for some items not normally accepted by a DLA Disposition Services site are:

a. Ammunition and Explosives (AE). (U.S. Munitions List (USML) Categories III, IV, and V). The Single Manager for Conventional Ammunition (SMCA) is responsible for DEMIL of conventional ammunition in accordance with DoDD 5160.65 (Reference (g)).

b. Aircraft (USML Category VIII). The Single Manager for each variant of aircraft is responsible for developing a DEMIL workbook with the Aerospace Maintenance and Regeneration Group. This workbook shall be created and updated in accordance with Reference (f) and Volume 2 of this Manual.

c. Vessels (USML Categories VI and XX). The Navy is responsible for disposing of warships in accordance with section 7306 of title 10, United States Code (Reference (h)), while the Maritime Administration is authorized as the disposal agent for Federal Government-owned obsolete, merchant type vessels that are equal to or greater than 1500 gross tons.

d. Classified Items. Volume 2 of this Manual contains information regarding DEMIL of classified items.

e. Contractor Inventory. DoD Components provide oversight for DEMIL and plant clearance in accordance with part 45 of title 48, Code of Federal Regulations (CFR) (Reference (i)) and subpart 245.6 of the Defense Federal Acquisition Regulation Supplement (Reference (j)).

2. DEMIL METHOD. The DEMIL method is influenced by the specific DEMIL requirement and available personnel skills, tools, and equipment that may vary among different performing organizations. Several factors influence the determination of the method of DEMIL.

a. DEMIL Code. DEMIL code requirements are identified in Table 1 of Volume 2 of this Manual.

b. Item Technical Characteristics. Material content, hazardous materials content, and physical configuration significantly influence the equipment, tools, and techniques that may be employed.

c. Qualified Personnel. Personnel performing a physical DEMIL function must be technically qualified and trained appropriately for processes and equipment use. These qualifications vary depending on the techniques and equipment used and is the responsibility of the organization to which the DEMIL personnel are employed. In addition, personnel verifying that the completed DEMIL is adequate, must be sufficiently knowledgeable of the DEMIL requirements for the material being processed to be able to verify through visual inspection that the destructive action taken is sufficient to have met the DEMIL requirement.

3. DEMIL PROCEDURES

a. Procedures for accomplishing physical DEMIL range from detailed, step-by-step procedures unique to a specific item (e.g., DEMIL code "F" items) to those that can be applied to a more general range of items (e.g., operation of an industrial shredder) and those that apply a general technique (e.g., torch cutting) using a standard operating procedure. General principles to aid in procedure development are:

(1) Technical data shall be demilitarized by burning, crosscut shredding, or pulping.

(2) Test equipment may contain DEMIL required components.

(3) It is preferable to DEMIL items to the level of scrap. (See section 39 in appendix to Enclosure 4 for relevant information.)

b. Development of procedures should always make use of existing documentation in procedural DEMIL plans developed in accordance with the guidelines in Volume 1 of this Manual. DEMIL plans should be requested from the applicable weapon system program manager. Also, some plans will be made available on the DoD DEMIL website at https://demil.osd.mil.

c. The Appendix to this enclosure provides guidance regarding the method and degree of required DEMIL of DoD personal property. The method and degree of DEMIL required and a description of key points requiring destruction are described for selected items in the USML. Each category in the Appendix of this enclosure corresponds to the same category in Enclosure 3 of Volume 2 of this Manual.

4. RESIDUAL MATERIALS

a. If the DEMIL actions do not reduce the item to scrap, the material remaining must be evaluated to determine if it carries additional DEMIL or Trade Security Controls (TSC) requirements. For example a DEMIL code "P" item may require further DEMIL after the classified material, information, or feature has been addressed. Similarly, a DEMIL code "F" or "G" item may require further DEMIL after the hazardous aspect has been addressed or after the energetic material has been removed, respectively.

b. If the DEMIL action is complete, the residue is still subject to export controls, in accordance with parts 730 through 774 of title 15, CFR (Reference (k)).

5. DEMANUFACTURING OF MILITARY ELECTRONICS

a. Demanufacturing contractors can receive usable and non-usable DEMIL and non-DEMIL required materiel. Military electronics shall be shredded or crushed, preferably to the point of pulverization.

b. Electronic equipment received at a DLA Disposition Services site that does not require DEMIL may still require TSC.

6. CERTIFICATION OF DEMIL

a. Certification. A certificate as shown in the sample format in Figure 1 shall be signed and dated by a DoD contracted person or a Government employee who actually performed or witnessed the DEMIL. The certificate shall be executed for all line items demilitarized. If the item is classified, it must first be declassified and certified as shown in the sample format in Figure 2.

b. Verification. The DEMIL certificate must be verified by a technically qualified DoD contracted person or a Government employee who witnessed the DEMIL of the material or inspected the residue. The individual who verifies the DEMIL should generally be at least in the next higher management or technical level to the initial certifying individual and must be a U.S. citizen.

(1) The certification and verification shall include the printed or typed name, grade, rank, or title, and activity of each signatory.

(2) Signing false DEMIL certificates constitutes a felony and may subject the individual to prosecution.

c. Contractor Sites. These sites are required to have a Government employee acting as a verifier during all DEMIL activities. To certify that DEMIL is complete, a certifier works with the Government verifier to validate DEMIL.

d. Records Retention Policy for DEMIL Certificates. DoD is responsible for managing their records and documents in accordance with DoDI 5015.02 (Reference (l)).

Figure 1. Sample Format of a DEMIL Certificate

Title:	**Certification of Demilitarization**
Description:	A certification statement as shown shall be signed and dated by a DoD contracted person or a Government employee who actually performed or witnessed the DEMIL. The certificate shall be verified by a technically qualified DoD contracted person or a Government employee who witnessed the DEMIL of the material or inspected the residue. The individual who verifies the DEMIL should generally be at least in the next higher management or technical level to the initial certifying individual and must be a U.S. citizen.

Disposal Turn-In Document:	QTY:
National Stock Number or Description:	

Certification Statement:

I CERTIFY THAT THE ITEMS(S) LISTED HEREON HAS/HAVE BEEN DEMILITARIZED IN ACCORDANCE WITH DoD MANUAL 4160.28, VOLUME 3, “DEFENSE DEMILITARIZATION: PROCEDURAL GUIDANCE,” CATEGORY _____, PARAGRAPH _____ AND/OR THE FOLLOWING APPLICABLE REGULATION:

_____ _____

Signature (Certifier):_____Date_____

Printed Name/Grade/Rank: _____

Title: _____

Phone (COM/DSN/FAX): _____

Address: _____

_____

==========

Signature (Verifier):_____Date_____

Printed Name/Grade/Rank: _____

Title: _____

Phone (COM/DSN/FAX): _____

Address: _____

_____

Reference:	DoD Manual 4160.28, Volume 3, "Defense Demilitarization: Procedural Guidance," current edition

Figure 2. Sample Format of a Declassification Certificate

Title:	**Certificate of Declassification**
Description:	All items that have been classified in the interest of national security regardless of use, purpose, or end item application require DEMIL. Classified material shall be declassified and demilitarized prior to transfer to a DLA Disposition Services site Certification of declassification shall be annotated on the turn-in document.
Disposal Turn-In Document:	QTY:
National Stock Number or Description:	
Certification Statement:	
I CERTIFY THE ITEM(S) HEREON HAS BEEN DECLASSIFIED / SANITIZED AND TO THE BEST OF MY KNOWLEDGE AND BELIEF CONTAIN NO SENSITIVE DATA/MARKINGS. Signature:_____Date_____ Printed Name/Grade/Rank: _____ Title: _____ Phone (COM/DSN/FAX): _____ Address: _____ _____	
Reference:	DoD Manual 4160.28, Volume 3, "Demilitarization Procedural Guidance," current edition

Appendix
Method and Degree of DEMIL

APPENDIX TO ENCLOSURE 3

METHOD AND DEGREE OF DEMIL

1. CATEGORY I. FIREARMS, CLOSE ASSAULT WEAPONS, AND COMBAT SHOTGUNS

a. DEMIL Code "D" Items. The preferred method of DEMIL for items assigned code "D" is smelting. An alternate DEMIL method is torch cutting, utilizing a cutting tip displacing 1/2 inch of metal at a minimum. All cuts shall completely sever the item, in accordance with instructions applicable to the items being demilitarized, as shown in the examples in Figures 3, 4, and 5. Shearing, crushing, deep water dumping, or smelting may be utilized when such methods of DEMIL are deemed cost effective or practicable and when authorized by the appropriate authority or the DoD DEMIL Program Manager (DDPM).

Figure 3. Machine Gun with Tripod

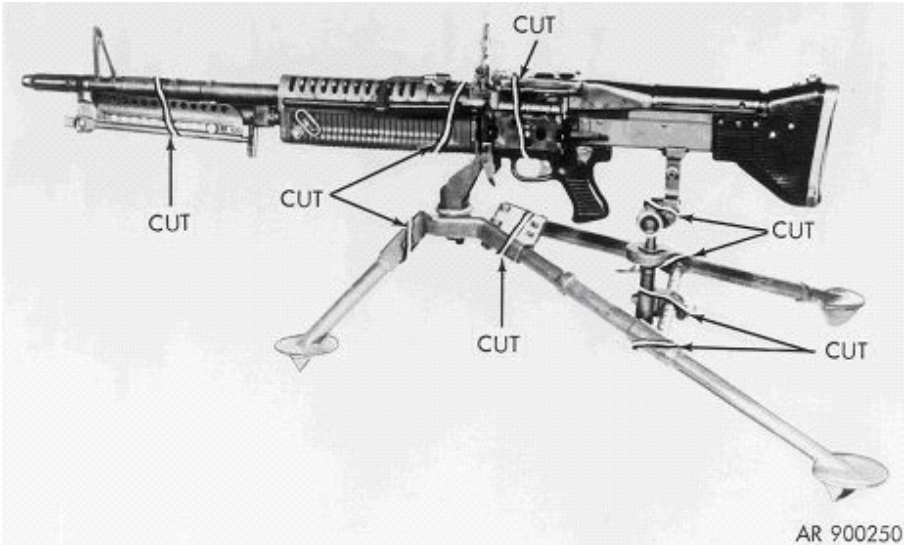

Figure 4. 7.62mm Coaxial Machine Gun

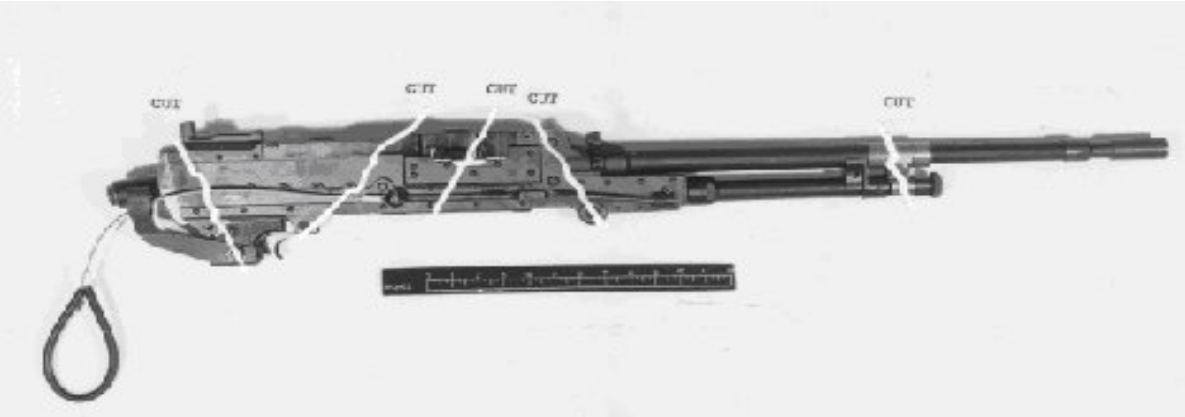

Figure 5. Assault Rifle

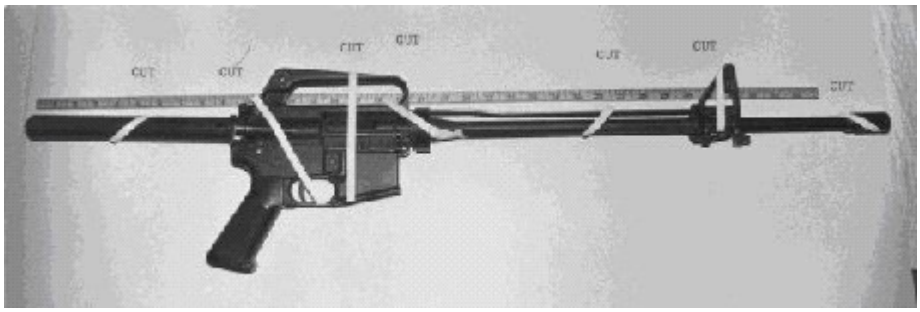

(1) Machine Guns. Machine guns shall be demilitarized by smelting, or by torch cutting utilizing a cutting tip that displaces 1/2 inch of metal at a minimum, or by shearing the receiver in a minimum of two places, or by crushing in a hydraulic or similar type press. Figures 3 through 5 illustrate the proper method of cutting a machine gun. The barrel shall be torch cut, sheared, or crushed in the chamber area and in two or more places to the extent necessary to prevent restoration to a useable condition. If shearing or crushing methods are used, the trunnion blocks and side frames must be completely cut through, broken, or distorted to preclude restoration to a usable condition.

(2) Receivers. Receivers shall be demilitarized by smelting; or by rotary shredding; or by shearing; or by torch cutting in a minimum of two places completely through the receiver as shown in Figures 4 and 5, utilizing a cutting tip that displaces 1/2 inch of metal at a minimum; or by crushing in a hydraulic or similar type press to preclude restoration to a usable condition.

(3) Bolts and Barrels. Bolts and barrels shall be demilitarized by smelting or torch cutting utilizing a cutting tip that minimally displaces 1/2 inch of metal, or crushed to the extent necessary to preclude restoration to a usable condition. Barrels shall be demilitarized by cutting (rotary shredding, shearing, or torching utilizing a cutting tip that displaces at least 1/2 inch of metal). At least three cuts shall be made with at least one cut through the chamber area. All barrels shall have a torch cut along the length of the barrel at the chamber end. The chamber cut shall be at least one wall thickness of the barrel and shall cut through the entire length of the chamber. Cuts shall be made completely through the barrel. Bolts shall be demilitarized by cutting (shear or torch) in a minimum of two places. A torch-cutting tip that displaces at least 1/2 inch of metal shall be used and cuts shall be made completely through the bolt.

(4) Accessories. Accessories, including silencers, suppressors, mufflers, rifle scopes and military telescopic and optical sights including those designed for night sighting and viewing, and gun mounts (including bipods and tripods), shall be demilitarized by smelting, breaking, crushing, or cutting in a manner that precludes restoration to a usable condition, in accordance with instructions applicable to the items being demilitarized as shown in Figures 3 and 6.

(5) Other Metallic Parts. Other metallic parts, except what is considered common hardware, shall be demilitarized by cutting, crushing, or smelting. All other DEMIL-required

small arms and light weapons (SA/LW) components not listed in paragraph 1.a. and not already authorized for local DEMIL shall be processed in accordance with Volume 2 of this Manual.

Figure 6. Machine Gun Tripod Mount

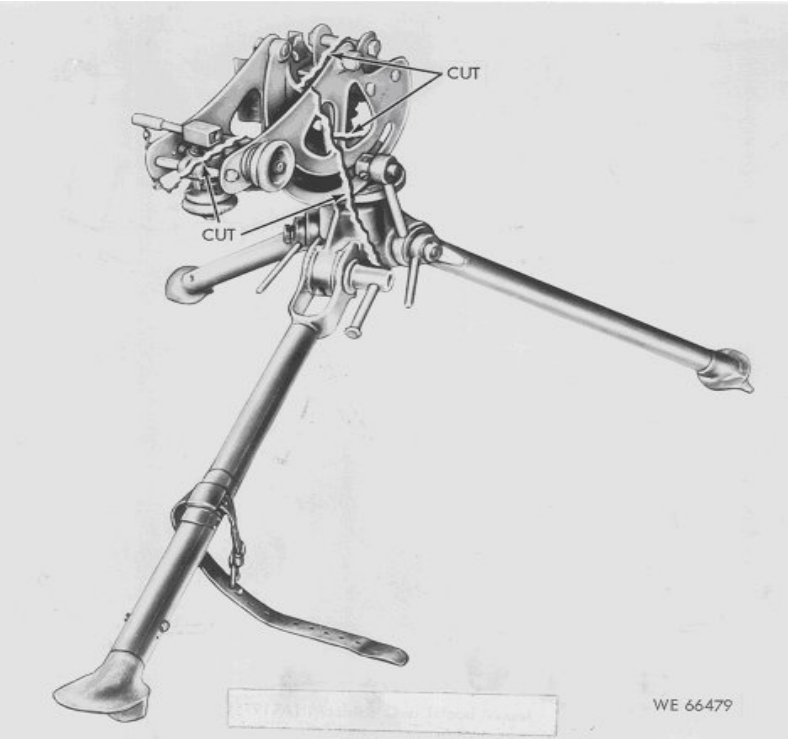

b. DEMIL Code "C" Key Point Items. Some examples of key points include, but are not limited to, attachment points, fittings, moveable joints, lenses, and infrared (IR) sources. All DEMIL code "C" items shall have the DEMIL required key points removed or destroyed in place. These key points themselves are assigned or treated as DEMIL code "D" items.

c. DEMIL Code "B" Items. Mutilation (MUT) to the point of scrap worldwide to ensure items are unfit for their intended purpose by cutting, tearing, scratching, crushing, breaking, punching, shearing, burning, neutralizing, etc.

2. CATEGORY II. GUNS AND ARMAMENT

a. DEMIL Code "D" Items. All DEMIL code "D" items shall be destroyed by cutting, burning, breaking, crushing, etc., as appropriate to preclude restoration for further use as an item or for identification and association of related parts. It is preferable to DEMIL all items to the level of scrap.

(1) Breechrings, Breech Chambers, Breech Couplings, Breechblocks, Breech Housings, Breechyokes, Breechplugs, and Firing Mechanisms. These items shall be cut through with the breechblock in the closed position (as shown in Figure 7) and through the firing mechanism (as

shown in Figure 8). Equivalent cutting of the breechring, breech chambers, breechblock, and firing mechanism as separate items is acceptable.

Figure 7. Breechring and Sliding Breechblock

Figure 8. Interrupted Thread Breechblock

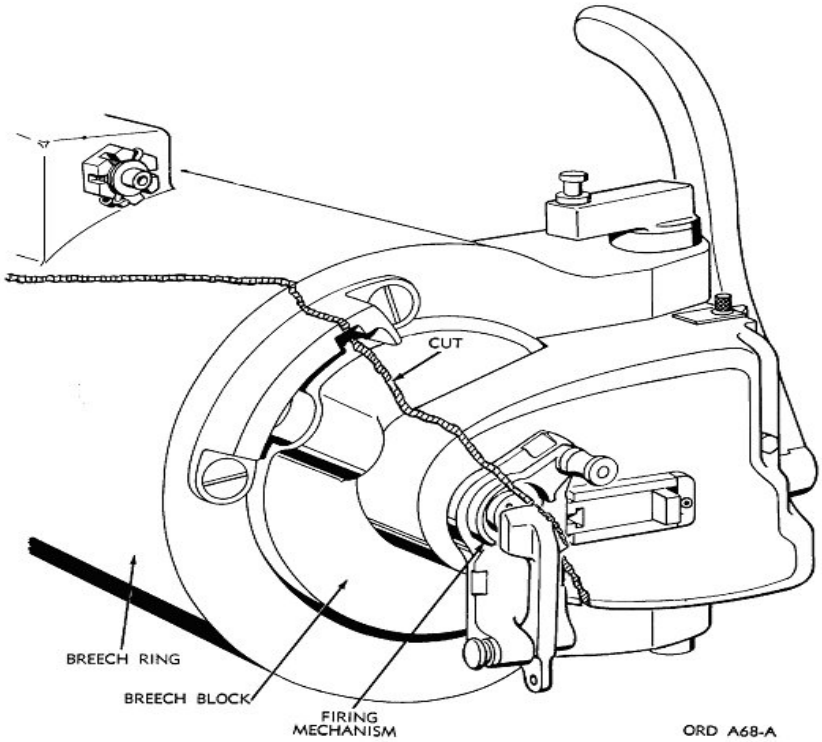

(2) 20mm Guns. 20mm guns shall be demilitarized by torch cutting utilizing a cutting tip that displaces 1/2 inch of metal at a minimum, as shown in Figure 9:

(a) Cut through the body of the receiver to the rear of the cradle with the bolt assembly remaining in the weapon if furnished with the assembly.

(b) Cut through the heavy portion of the barrel, the gas operating system, and recoil spring.

(c) Torch the chamber opening in the barrel and forward portion of the bolt, if assembled in weapons, sufficiently to create a metal puddle.

(d) Cut, shear, or crush the 20mm feeder.

Figure 9. 20mm Gun

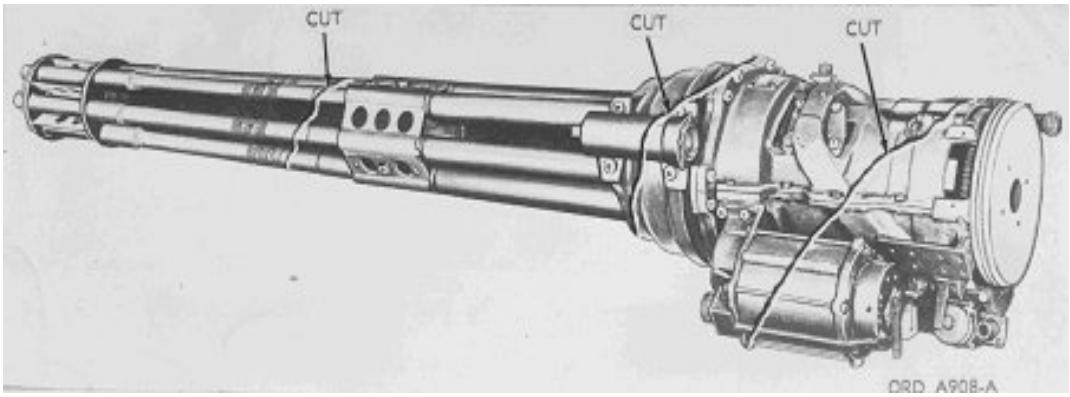

(3) Receivers (30mm guns). Receivers shall be cut into three sections by cutting through the barrel support section, with a second cut through the slideways.

(4) Receiver Casings. Receiver casings shall be cut completely through the casing body assembly near the rammer tray.

(5) Barrels (Guns and Howitzer). Barrels shall be cut into two pieces, the cut being made as near the point of origin of the rifling as possible but not more than one-third of the barrel length from the breech face of the tube as shown in Figure 10. Combat vehicle artillery shall be cut just in front of the mantelet or shield.

(6) Trunnions, Trunnion Bearings, and Trunnion Bearing Caps (not disassembled). Trunnions, trunnion bearings, and trunnion bearing caps (not disassembled) shall be cut completely through diagonally.

(7) Mortars. Mortars shall be cut by torch or crushed as shown in Figure 11.

Figure 10. Artillery Tube

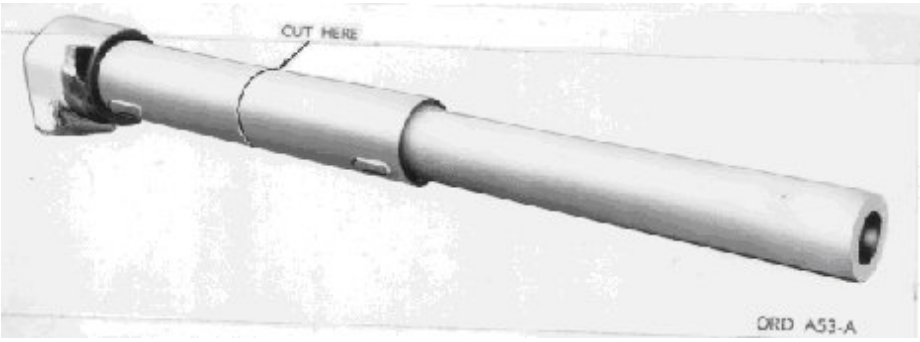

Figure 11. Mortar Tube

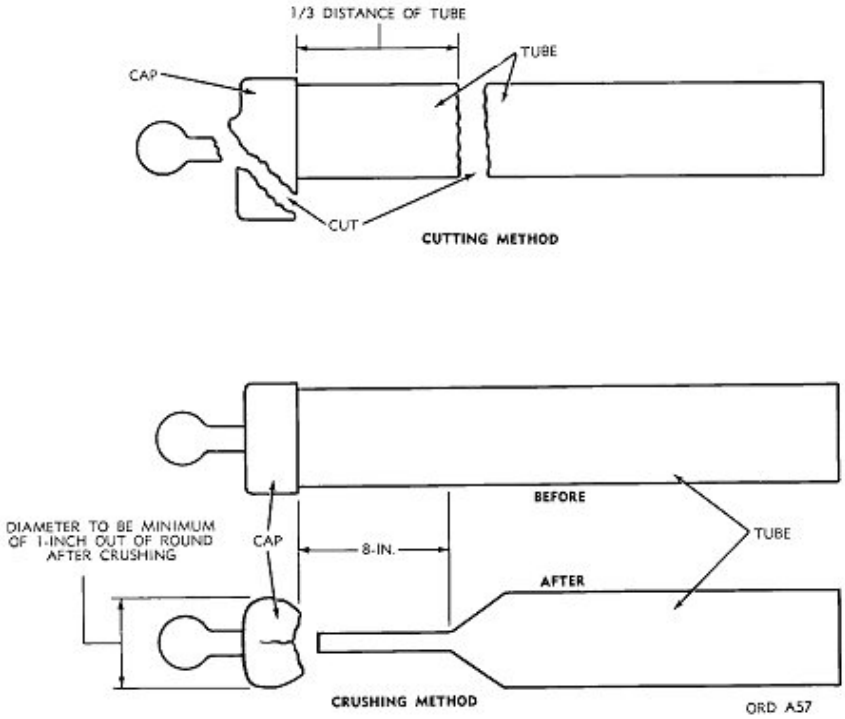

(a) When the cutting method is used, the tube shall be cut into two pieces, the cut being made one-third of the length of the tube from the cap end. The cap shall be cut into three pieces, the cut being made diagonally through the cap.

(b) When the crushing method is used, the mortar tube shall be crushed so that the inner surfaces of the tube touch for a distance of 8 inches, extending from the base cap end toward the muzzle end of the tube. The base cap shall be crushed until the largest diameter of the cap is out of round by a minimum of 1 inch.

(8) Military Flame Thrower Mechanisms. Military flame thrower mechanisms shall be cut, crushed, or broken.

(9) Hydropneumatic Recoil and Equilibrator Mechanisms

(a) DEMIL of recoil mechanisms and equilibrators must be accomplished by qualified personnel only.

(b) Prior to release of hydropneumatic recoil or equilibrator mechanisms (which in a broad sense includes counter-recoil (recuperator) mechanisms) to a disposal activity, reserve oil shall be drained and nitrogen pressure released by technically qualified personnel in accordance with instructions in the pertinent technical manuals.

(c) Oil and nitrogen release valves and drain plugs shall be left open during cutting operations.

(d) If the nitrogen pressure cannot be released due to a faulty valve, a 1/8-inch hole shall be drilled by technically qualified personnel in the wall of the nitrogen cylinder 6 inches from the nitrogen end, as shown in Figure 12, to release the pressure.

Figure 12. Hydropneumatic Recoil Mechanism

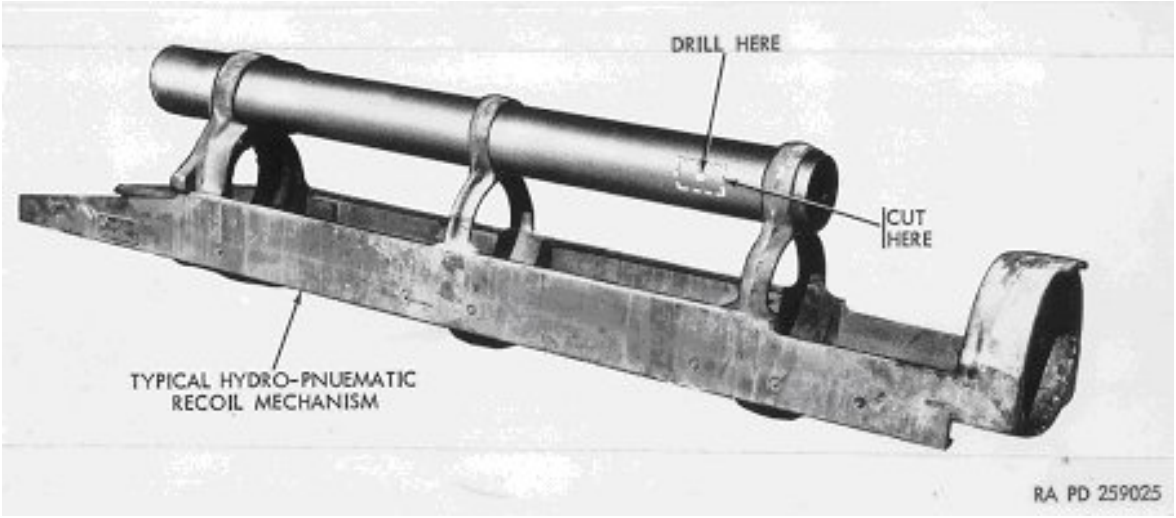

(e) Extreme caution should be exercised while drilling the hole in the nitrogen cylinder wall. A suitable safety shield should be used to protect personnel from the drill shavings that are expelled from the hole when the drill bit enters the nitrogen cylinder. Protection should also be provided for eyes, face, arms, and hands of personnel performing the operation.

(f) To prevent a possible internal buildup of oxygen and acetylene in the nitrogen cylinder during cutting operations, a 1/2-inch hole shall be drilled 6 inches from the end of the

nitrogen cylinder as shown in Figure 12. To perform this operation on the 155mm, 175mm, and 8-inch howitzer mechanisms, a section of the cover or housing must be cut away.

(g) Enlarge the 1/2-inch hole with a gas-cutting torch by removing a section of at least 2 square inches from the nitrogen or recuperator cylinder as shown in Figures 12 and 13. If qualified explosives personnel are available, a satisfactory hole can be made by the use of shaped charge instead of drilling and cutting with a torch.

Figure 13. Nitrogen Cylinder

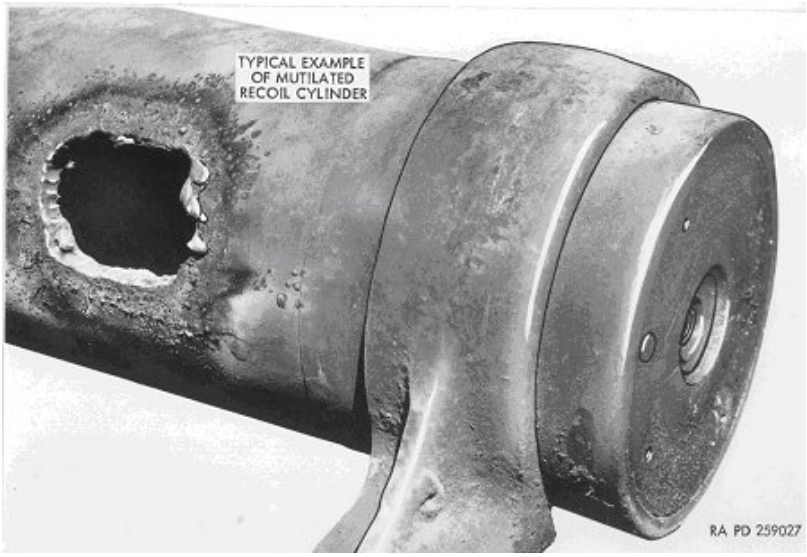

(h) The recoil rod and counter-recoil rod, if present, shall be cut completely through and flush with the recoil and counter-recoil cylinder as shown in Figure 14. Hydropneumatic equilibrators such as those on the 155mm and 175mm guns and 8-inch howitzers shall be cut as shown in Figure 15.

(10) Hydrospring Recoil and Equilibrator Cylinder

(a) Drain the oil from the hydrospring recoil cylinders. On hydrospring cylinders, cut through the cylinder lengthwise, such that the cut is 4 inches or more in length and of sufficient depth to cut through at least two coils of the spring as shown in Figure 16. Concentric-type recoil mechanisms shall be cut through the cradle in the most accessible area, the cut to be of sufficient length and depth to cut at least two coils of the spring as shown in Figure 17.

(b) Hydrospring recoil and equilibrator mechanisms contain springs under high pressure; therefore, extreme caution must be exercised. DEMIL must be performed by technically qualified personnel only. No attempt should be made to cut the cylinder in two pieces without prior release of spring tension.

Figure 14. Recoil Rod

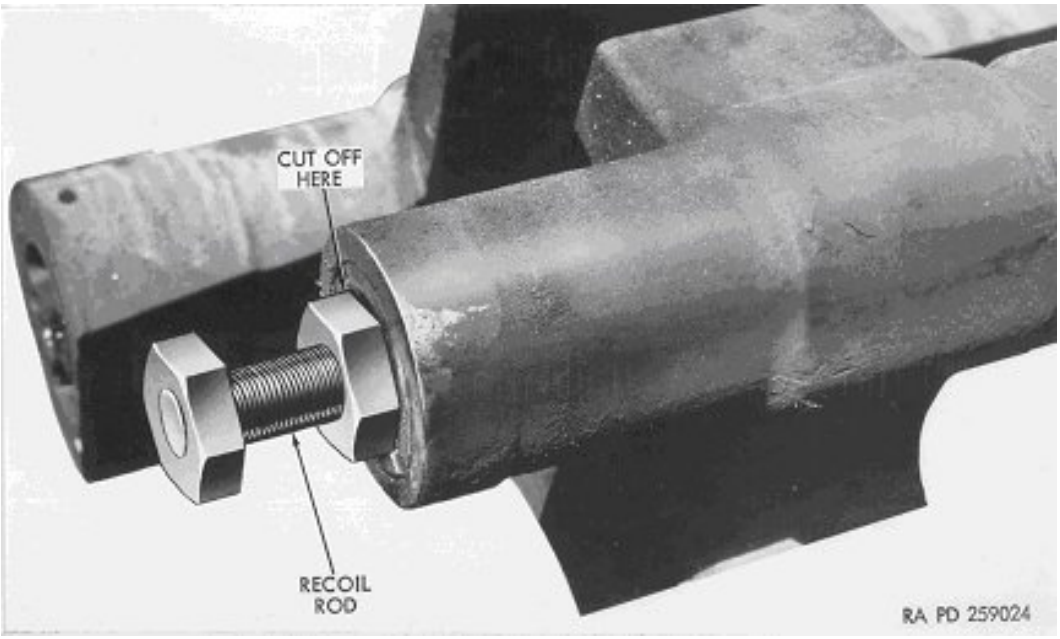

Figure 15. Hydropneumatic Equilibrator

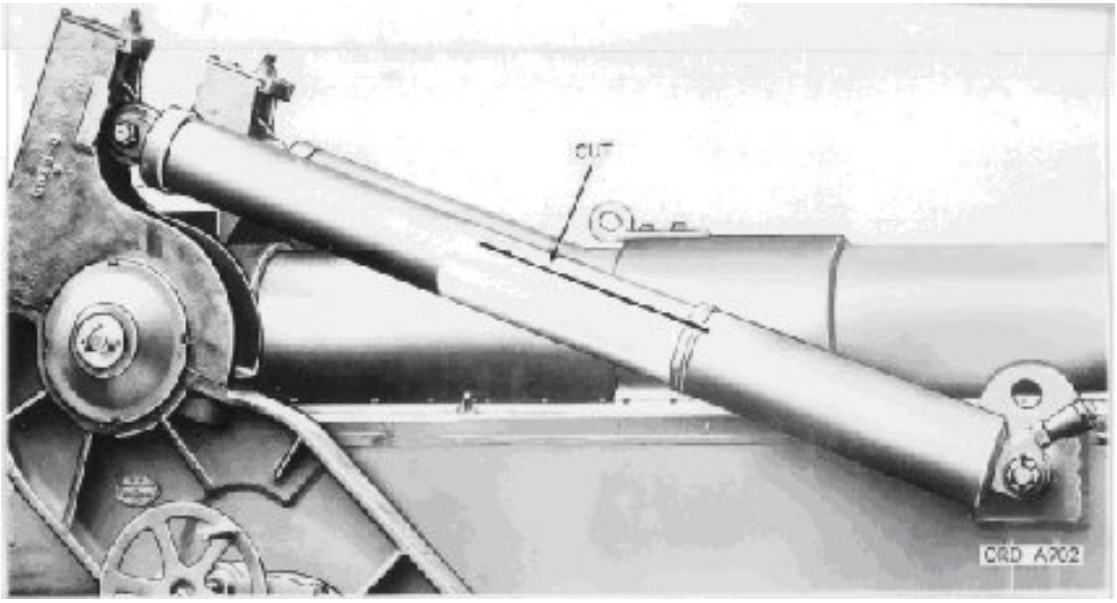

Figure 16. Spring-Type Equilibrator

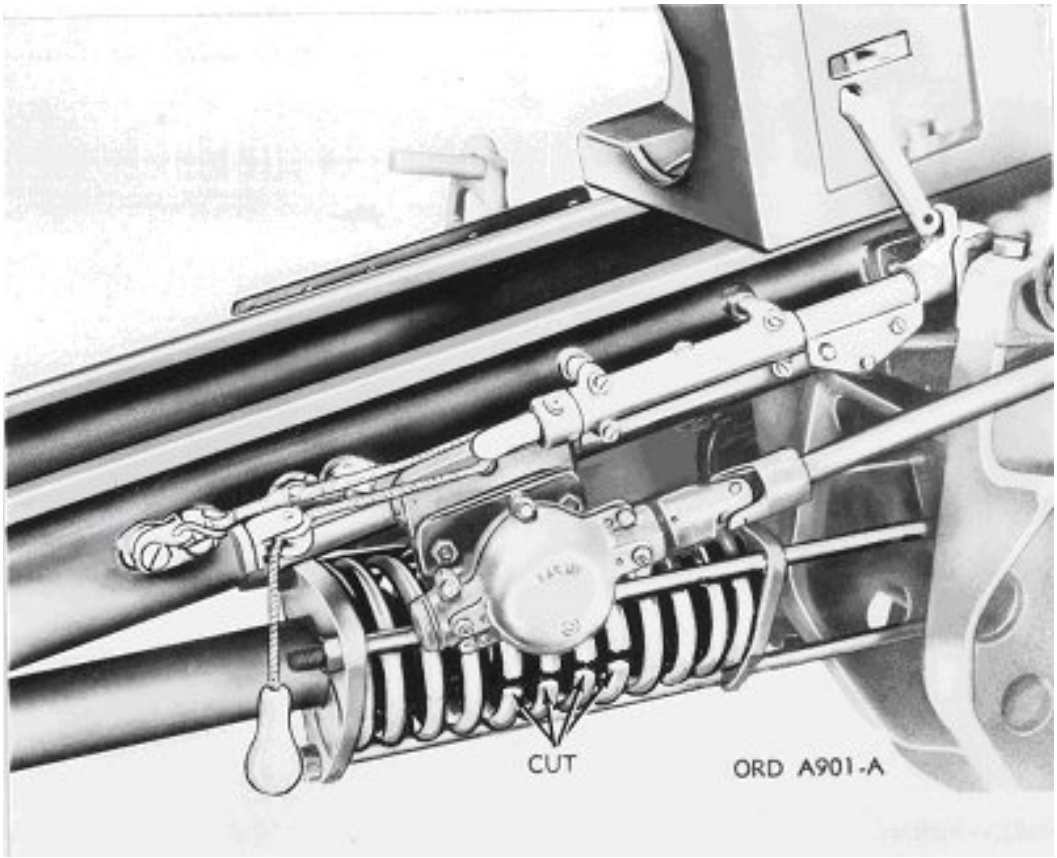

Figure 17. Concentric Recoil Mechanism-Type Cannon

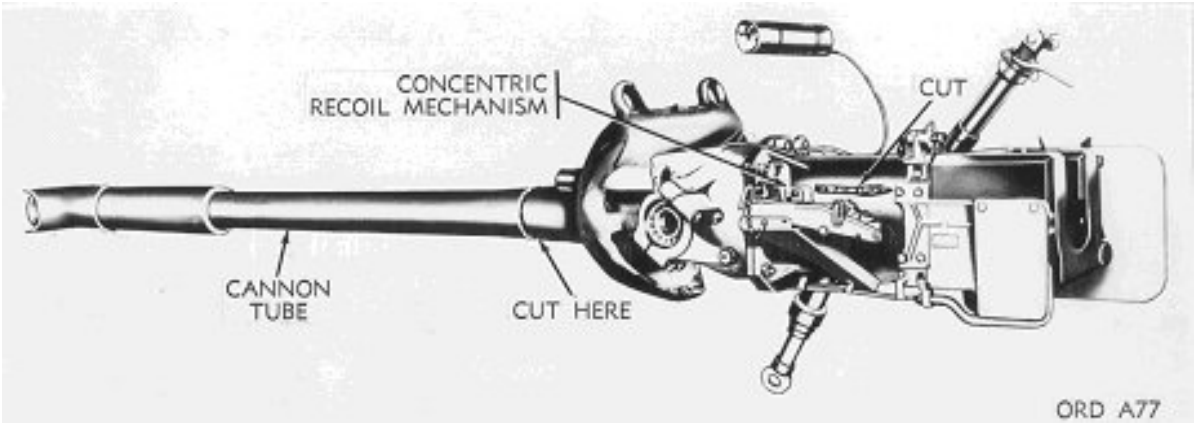

(c) In the case of the 40mm automatic gun, the procedures are:

1. Remove the two drain plugs near the front of the recoil cylinder(s) and drain the recoil oil.

2. At a point just behind the recoil cylinder attaching bracket, cut completely through the tube of the casing body assembly, recoil cylinder(s), and barrel assembly(s) (if a barrel is installed on the gun).

3. Open the top cover(s) and cut longitudinally through the top portion of the breechring(s) and breechblock(s).

4. At a point between the front and rear loader guides, cut completely through the breech casing body(s) and tray(s).

(11) Spring-Type Equilibrators. Spring-type equilibrators such as the type used on the 105mm howitzers of the M2-series shall be cut through both inner and outer spring as shown in Figure 18.

Figure 18. Concentric Recoil Mechanism-Type Gun Launcher

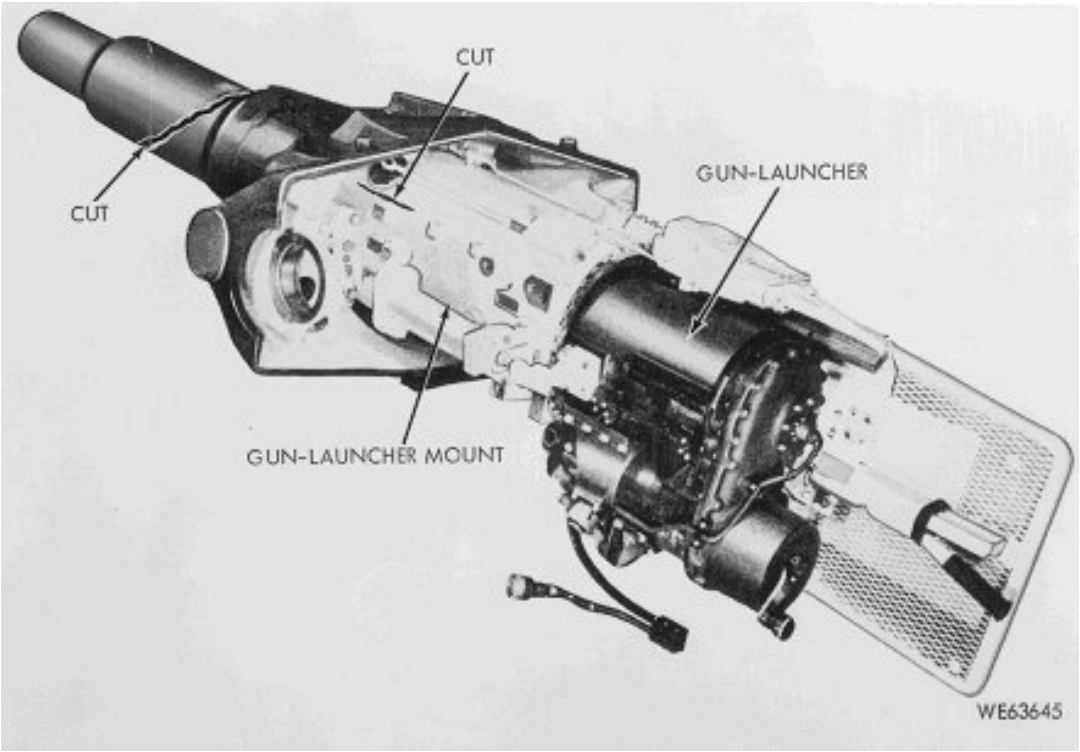

(12) Top Carriages, Bottom Carriages, Mounts, and Outriggers. Top carriages, bottom carriages, mounts, and outriggers shall be cut through below the trunnion bearings.

(13) Turret Rings. Turret rings shall be cut in half utilizing a cutting tip that displaces 1/2 inch of metal at a minimum.

b. DEMIL Code “C” Key Point Items. Some example of key points include, but are not limited to, tubes and gun barrels, muzzle brakes, flame hiders, launching rails, receivers,

breechblocks, breech chambers, breech couplings, breechrings, breech housings, breechyokes, breechplugs, trunnion blocks, firing mechanisms, feeder mechanisms, release mechanisms, equilibrators, recoil mechanisms, recuperator mechanisms, torpedo tube muzzle and breechdoors, turret rings, flame thrower operating mechanisms, gun mounts, and carriages (see paragraph 2.a. for more examples of key points). All DEMIL code "C" items shall have the DEMIL required key points removed or destroyed in place. These key points themselves are assigned or treated as DEMIL code "D" items.

c. DEMIL Code "F" Items. See Enclosure 5 of Volume 2 of this Manual regarding the method to obtain special instructions.

d. DEMIL Code "B" Items. MUT to the point of scrap worldwide to ensure items are unfit for their intended purpose by cutting, tearing, scratching, crushing, breaking, punching, shearing, burning, neutralizing, etc.

3. CATEGORY III. AMMUNITION/ORDNANCE

a. DEMIL Code "D" Items. All DEMIL code "D" items shall be destroyed by cutting, burning, breaking, crushing, etc., as appropriate to preclude restoration for further use as an item or for identification and association of related parts. It is preferable to DEMIL all items to the level of scrap.

(1) Inert Loaded Ammunition, Projectiles, and Similar Items of all Types Loaded with Inert Filler to Simulate a Service Item. Remove the fuse and/or spotting charge, where applicable, and burn or detonate. Remove the rotating band from artillery projectiles and open the closure of the projectile body to expose the inert filler. On items without rotating bands, open the body closure to expose the inert filler and damage the closure surface to prevent reloading or resealing. For inert loaded items (concrete, sand, plaster), a potential explosive safety hazard exists when the internal filler is not exposed or unconfined during burning, melting, or cutting. Heat generated from a DEMIL process can cause the filler, moisture, and air to expand and burst sealed casings. For this reason, disposal activities shall not accept inert loaded items unless the internal filler is exposed and unconfined. The internal filler may be exposed by removal of the fuze well from the cavity, removal of base plates, or by puncturing or drilling holes in the bomb casing.

(2) Ammunition And Components That Have Been Fired or Expended, Range Residue, and Other Non-Explosive Items. All items shall be rendered free of energetic materials prior to accomplishment of DEMIL. Range residue shall be processed in accordance with Reference (f) and DoDI 4140.62 (Reference (m)) after all required DEMIL is accomplished.

(3) Artillery and/or Mortar Ammunition Components and Similar Items of All Types. Remove the rotating band and deform fuze cavity threads or score or deform bourrelet or gas check band. Score practice round projectile with a torch, displacing a minimum of 1 cubic inch of metal or shear into two pieces. Deform fin assembly threads and fin blades.

(4) Other Non-Explosive Filled Items. Cut, crush, or process through a deactivation furnace. Burn or cut cartridge case lines and propelling charge bags. Cut, burn, or crush aircraft and ground signal cases. Crush or detonate piezoelectric elements.

b. DEMIL Code "C" Key Point Items. All DEMIL code "C" items shall have the DEMIL required key points removed or destroyed in place. These key points themselves are assigned or treated as DEMIL code "D" items.

c. DEMIL Code "G" Items. The SMCA is responsible for DEMIL and disposal for conventional ammunition in accordance with Reference (g) and DoDI 5160.68 (Reference (n)). Technical instructions shall be furnished by the Military Services having overall knowledge and responsibility for disposal of the material.

d. DEMIL Code "B" Items. MUT to the point of scrap worldwide to ensure items are unfit for their intended purpose by cutting, tearing, scratching, crushing, breaking, punching, shearing, burning, neutralizing, etc.

4. CATEGORY IV. LAUNCH VEHICLES, GUIDED MISSILES, BALLISTIC MISSILES, ROCKETS, TORPEDOES, BOMBS, AND MINES

a. DEMIL Code "D" Items. All DEMIL code "D" items shall be destroyed by cutting, burning, breaking, crushing, etc., as appropriate to preclude restoration for further use as an item or for identification and association of related parts. It is preferable to DEMIL all items to the level of scrap.

(1) Grenade Launchers

(a) The preferred method of destruction for extruded and cast aluminum construction items is crushing. Alternatively, cut as shown in Figure 19.

Figure 19. 40mm Grenade Launcher, M203

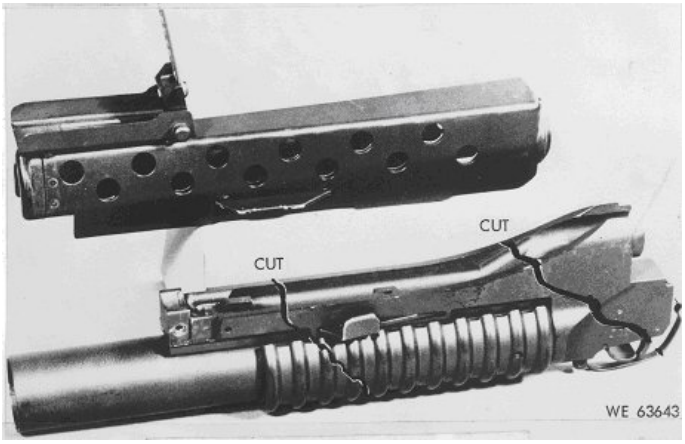

(b) In the case of automatic grenade launchers, make four cuts as shown in Figure 20:

Figure 20. 40mm Automatic Grenade Launcher, Mk19

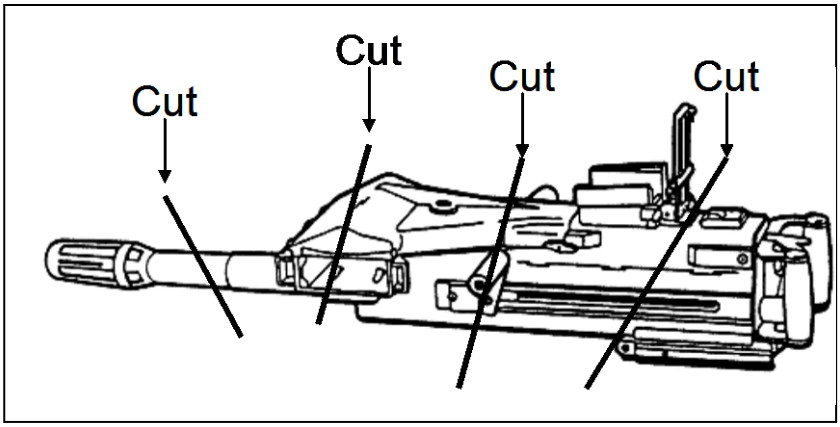

1. Just behind the suppressor.

2. Where the barrel and receiver connect.

3. Middle of receiver.

4. Where the rear sight and receiver connect.

(2) Rocket Launchers (Figure 21). Rocket launchers, including rails, shall be cut, crushed, or broken to render them inoperable and beyond restoration.

Figure 21. Rocket Launcher

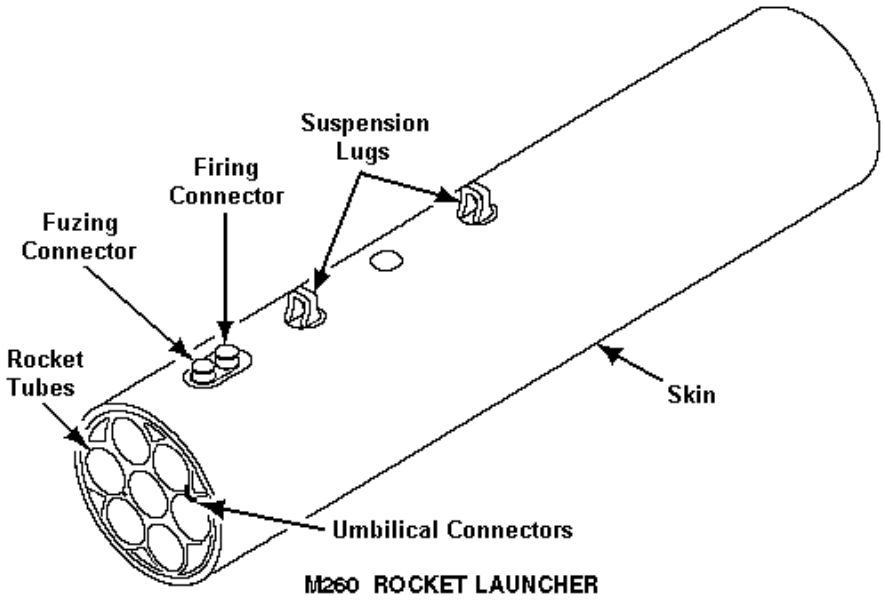

(3) Torpedo Tubes

(a) The breechring shall be removed by cutting or sawing from the torpedo tube barrel. The point of cut in the barrel shall be approximately 6 to 12 inches forward from the face of the breechring. Remove the rotating breechlocking ring and cut in half.

(b) All muzzle and breechdoors shall be cut into two pieces of approximately equal sizes.

b. DEMIL Code "C" Key Point Items. All DEMIL code "C" items shall have the DEMIL required key points removed or destroyed in place. These key points themselves are assigned or treated as DEMIL code "D" items.

c. DEMIL Code "G" Items. The SMCA is responsible for DEMIL and disposal for conventional ammunition in accordance with References (g) and (n).

d. DEMIL Code "B" Items. MUT to the point of scrap worldwide to ensure items are unfit for their intended purpose by cutting, tearing, scratching, crushing, breaking, punching, shearing, burning, neutralizing, etc.

5. CATEGORY V. EXPLOSIVES AND ENERGETIC MATERIALS, PROPELLANTS, INCENDIARY AGENTS, AND THEIR CONSTITUENTS.

a. DEMIL Code "D" Items. Technical data shall be demilitarized by burning, crosscut shredding, or pulping.

b. DEMIL Code "G" Items. The SMCA is responsible for DEMIL and disposal for conventional ammunition in accordance with References (g) and (n). Technical instructions shall be furnished by the Military Services having overall knowledge and responsibility for disposal of the material.

6. CATEGORY VI. VESSELS OF WAR AND SPECIAL NAVAL EQUIPMENT. Warships and special naval equipment shall be demilitarized as prescribed by the appropriate Naval Sea Systems Command or other procuring Military Service and/or Defense Agency. See Enclosure 4 for procedures for special processing of these items.

a. DEMIL Code "D" Items. Navy gun mounts, Navy gun turrets, and other armored items, as shown in Figure 22, shall have the armor cut into at least four approximately equal sized pieces to destroy integrity and turret rings cut in two places. All DEMIL code "D" items shall be destroyed by cutting, burning, breaking, crushing, etc., as appropriate to preclude restoration for further use as an item or for identification and association of related parts. It is preferable to DEMIL all items to the level of scrap.

Figure 22. 5”/62 Naval Gun Mount

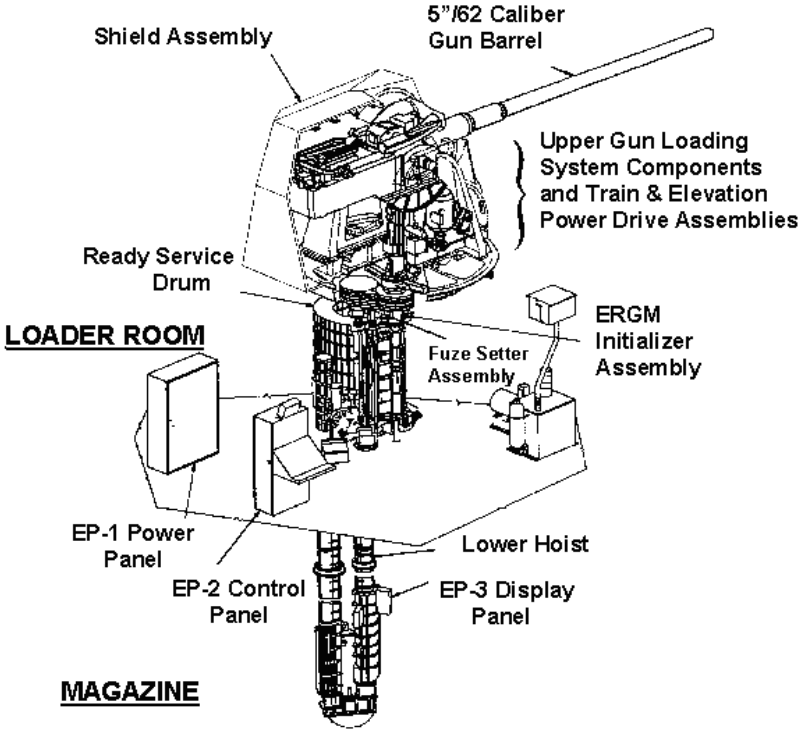

b. DEMIL Code “C” Key Point Items. Armament, hulls (warships only), applicable items designated in other categories in this appendix, and other items designated by the Naval Sea Systems Command or other procuring Military Service and/or Defense Agency. All DEMIL code “C” items shall have the DEMIL required key points removed or destroyed in place. These key points themselves are assigned or treated as DEMIL code “D” items.

c. DEMIL Code “F” Items. See Enclosure 5 of Volume 2 of this Manual regarding the method to obtain special instructions.

d. DEMIL Code “B” Items. MUT to the point of scrap worldwide to ensure items are unfit for their intended purpose by cutting, tearing, scratching, crushing, breaking, punching, shearing, burning, neutralizing, etc.

7. CATEGORY VII. TANKS AND MILITARY VEHICLES

a. DEMIL Code “D” Items. All DEMIL code “D” items shall be destroyed by cutting, burning, breaking, crushing, etc., as appropriate to preclude restoration for further use as an item or for identification and association of related parts. It is preferable to DEMIL all items to the level of scrap.

(1) Armament. Armament shall be demilitarized as prescribed for Categories I and II in sections 1 and 2 of this enclosure, respectively. DEMIL of the main armament (such as gun, howitzer, mortar, or rocket launcher) on combat vehicles may be accomplished on the vehicles or after removal from the vehicles.

(2) All Hinge-Mounted Items. All hinge-mounted items (such as doors, ramps, or hatches) shall be removed from the vehicle prior to cutting the hull.

(3) Turrets and/or Cupolas. Turrets and/or cupolas shall be cut into two sections as shown in Figure 23 and removed prior to cutting the hull.

Figure 23. Tank, Combat, Full Tracked

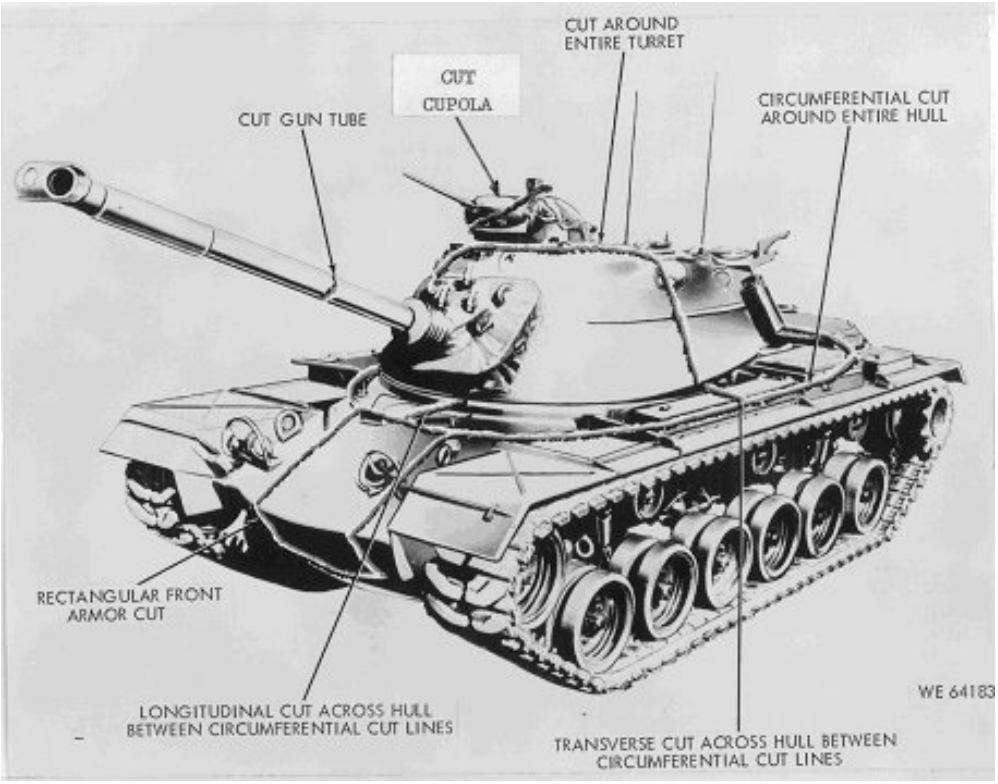

(4) Hulls and Chassis

(a) The top section of the hull on all vehicles shall be cut into four sections without affecting the suspension, as shown in Figures 23 through 25. To accomplish the hull cuts, a complete circumferential cut shall be made at or just above the track or wheel level and cuts shall be made across the top of the hull from the front center to the rear center (longitudinal) and from the left side center to the right side center (transverse).

Figure 24. Personnel Carriers

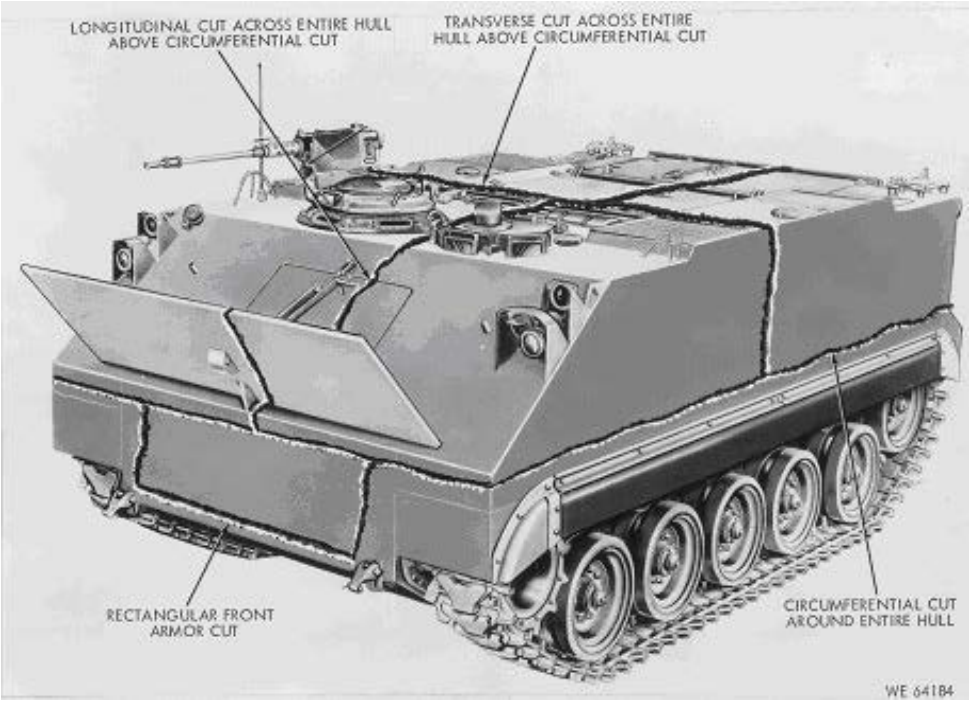

Figure 25. Tank Recovery Vehicles

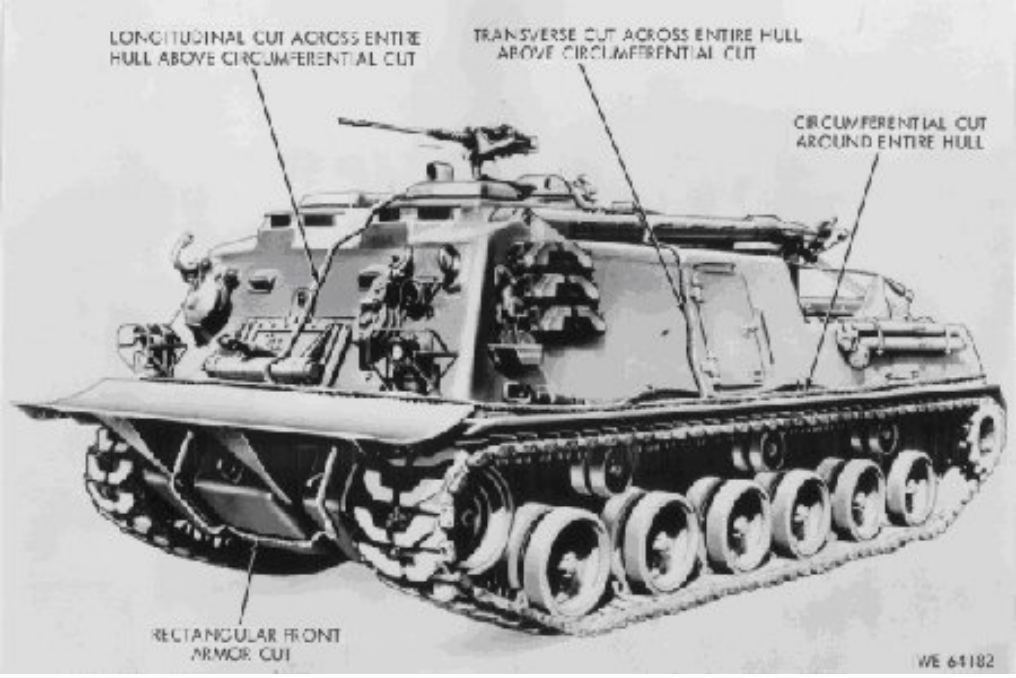

(b) A rectangular section of the hull front armor plate, starting at the circumferential cut and extending to the floor line, shall be removed. The width of the section shall be determined by making the widest cut possible without affecting the suspension.

(c) The bottom section, including the chassis, shall be cut into four sections.

(5) Turret Rings. Turret rings shall be cut in half utilizing a cutting tip that displaces 1/2 inch of metal at a minimum.

(6) Hard Targets. See the Appendix to Enclosure 4 for procedures for special processing.

(7) Grenade Projector Mounts. Grenade projector mounts, as used in the M551 armored reconnaissance airborne vehicle, shall be demilitarized by cutting to destroy the firing solenoid (Figure 26).

Figure 26. Grenade Projector Mounts

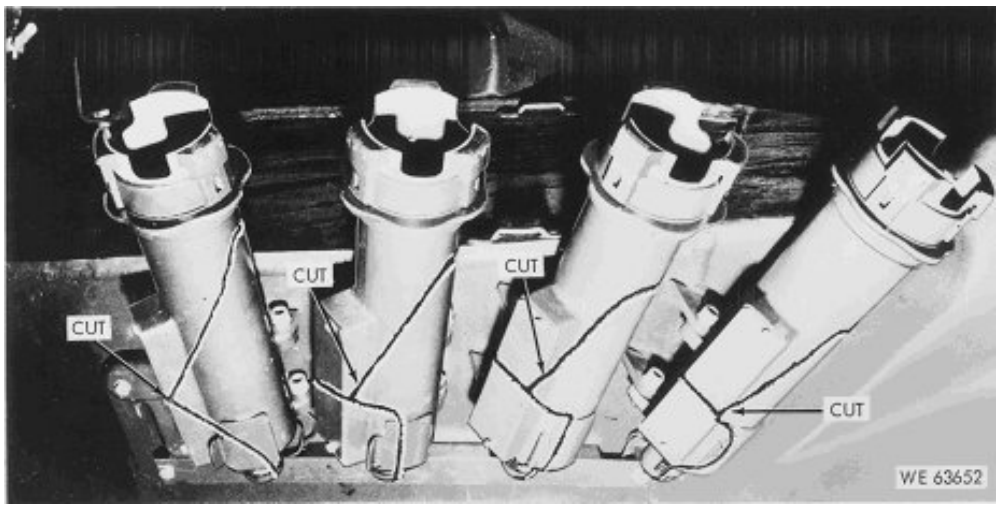

(8) Military Type Armed and Armored Vehicles. Military type armed and armored vehicles (i.e., integrated as opposed to being attached) shall be destroyed completely, paying attention to the key points (as described in paragraph 7.b), including turbochargers and superchargers, if installed. Armor shall be cut into 14-16 inch pieces. Armament shall be demilitarized as prescribed for Categories I and II. DEMIL of the main armament on combat vehicles may be accomplished on the vehicles or after removal from the vehicles.

b. DEMIL Code "C" Key Point Items (Figure 27). Some example of key points for vehicles, self-propelled guns, howitzers, mortars, military railway trains, and combat engineer vehicles include, but are not limited to, up-armor kits, AE, weapons, weapon fittings and/or mounts and special reinforcements for those mountings, communications equipment, ballistic glass, wiring and/or cable harnesses and assemblies, engines specifically designed, modified, or configured for the item, transmissions, deep water fording equipment (if installed), pneumatic tire casings of a kind designed to be bullet-proof or to run when deflated, tire inflation pressure control systems (operated from inside a moving vehicle), areas of armored protection for vital parts, (e.g., fuel tanks or vehicle cabs), identification plates, radioactive components, and other electronics. All

DEMIL code "C" items shall have the DEMIL required key points removed or destroyed in place. These key points themselves are assigned or treated as DEMIL code "D" items.

Figure 27. Up-Armored Truck

c. DEMIL Code "E" Items. See existing instructions or request guidance using the DoD DEMIL Program Office contact information provided on the DoD DEMIL website at https://demil.osd.mil.

d. DEMIL Code "B" Items. MUT to the point of scrap worldwide to ensure items are unfit for their intended purpose by cutting, tearing, scratching, crushing, breaking, punching, shearing, burning, neutralizing, etc.

8. CATEGORY VIII. AIRCRAFT AND ASSOCIATED EQUIPMENT

a. DEMIL Code "D" Items. Armament (Figure 28) shall be demilitarized as specified for Categories I, II, and IV. All DEMIL code "D" items shall be destroyed by cutting, burning, breaking, crushing, etc., as appropriate to preclude restoration for further use as an item or for identification and association of related parts. It is preferable to DEMIL all items to the level of scrap.

b. DEMIL Code "C" Key Point Items. All DEMIL code "C" items shall have the DEMIL required key points removed or destroyed in place. These key points themselves are assigned or treated as DEMIL code "D" items.

(1) Military Aircraft

(a) Aircraft (Figure 29 and Figure 30) that are specifically designed for military purposes shall be demilitarized as follows: at a minimum, cut or break completely through at least one lobe of the fuselage trifurcated horizontal and vertical stabilizer spar attachment fittings, on both the right and the left hand sides of the stabilizer carry-through spar assemblies. This demarcation of the prescribed DEMIL procedures is to ensure the aircraft is rendered unfit for flight. Cut or break completely through at least one lobe of the stabilizer bifurcated spar attachment fittings, on both the right and the left hand sides of the horizontal and vertical stabilizer wing carry-through spar assemblies. The area where the wing attaches and becomes a

part of the fuselage structure shall be mutilated in a manner that completely severs the wing spar and makes the aircraft unfit for flight. The empennage (tail assembly) shall be destroyed by mutilating the horizontal and vertical stabilizer attaching fittings area in such a manner as to make it unfit for flight. The fuselage shall be destroyed by severing an area (normally at the production break) between the wing and empennage. As an option, the airframe and fuselage may be destroyed by crushing, shredding or smelting. Some example of key points include, but are not limited to: aircraft fuselage, tail assembly, wing spar, armor, radomes, armament and armament provisions, missile ablative shell, impact detectors and circuitry, and missile guidance systems.

(b) Helicopters (Figure 31) specifically designed for military purposes shall be demilitarized by crushing, shredding, or smelting the entire airframe and fuselage, ensuring that the transmission mounts and supporting structural beams, engine deck in area of mounts, wing attaching mounts and support beam structure, and fuselage to tail boom attaching mounts and tail rotor gear box mounts have been destroyed. Notations in Figure 32 identify key points for DEMIL that need to be removed or destroyed.

(2) Engines

(a) Turbojet, Turboprop, and Turbofan Engines. Remove the turbine wheel and shaft assembly from the engine and cut a segment of turbine wheel bucket spines containing two or more “fir trees.” Sever the shaft at the wheel end bearing point. For multistage turbines, only the shaft and last stage turbine wheel need to be demilitarized. In cases where it is not economically practicable or feasible to remove the turbine wheel and shaft assembly from the engine, gain access to them by removing or cutting a hole in the shroud.

(b) Ramjet, Pulsejet, and Scramjet Engines. Some examples of key points include, but are not limited to, ignition system, fuel system (including the variable area nozzles and/or fuel spray systems), and engine mounting fittings.

(c) Rocket Engines. Some examples of key points include, but are not limited to, thrust chamber, turbine pump, balanced material orifices, gas generator (when used) and engine mounting fittings.

(3) Non-Expansive Balloons. Specific instructions and technical guidance for DEMIL shall be furnished by the Commander, Naval Air Systems Command, 47123 Buse Road, Building 2272 Suite 540, Patuxent River, MD 20670, upon request.

c. DEMIL Code “G” Items. Pylons and ejector/release racks shall be demilitarized as shown in Figure 32. Technical instructions shall be furnished by the Military Services having overall knowledge and responsibility for disposal of the material.

d. DEMIL Code “B” Items. MUT to the point of scrap worldwide to ensure items are unfit for their intended purpose by cutting, tearing, scratching, crushing, breaking, punching, shearing, burning, neutralizing, etc.

Figure 28. 7.62mm Machine Gun - 40mm Grenade Launcher Helicopter Armament Subsystem

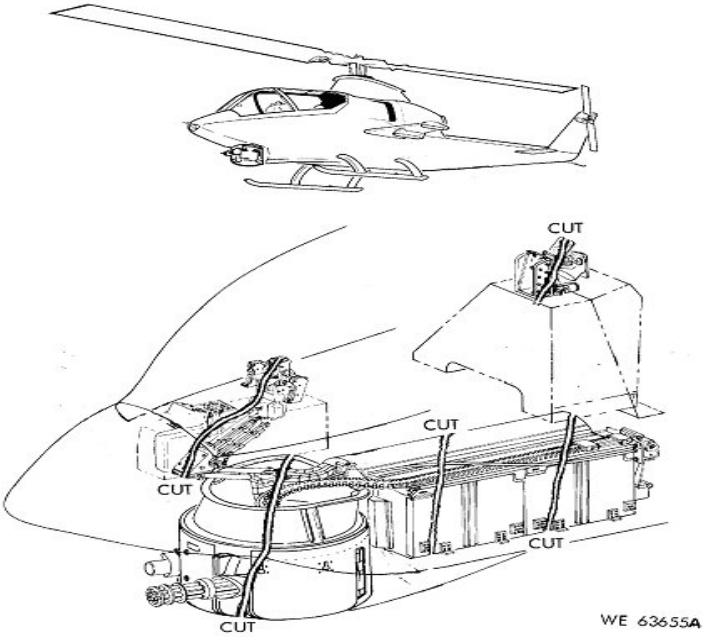

Figure 29. Single Engine Aircraft

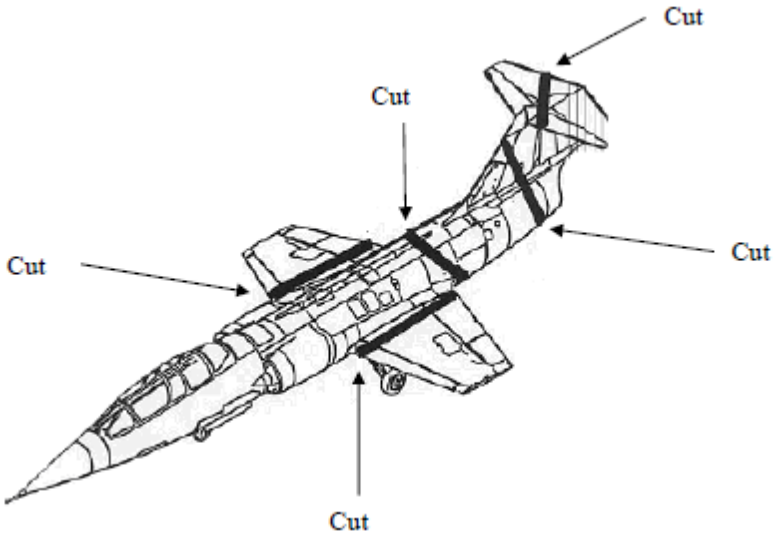

Figure 30. Multi-Engine Aircraft

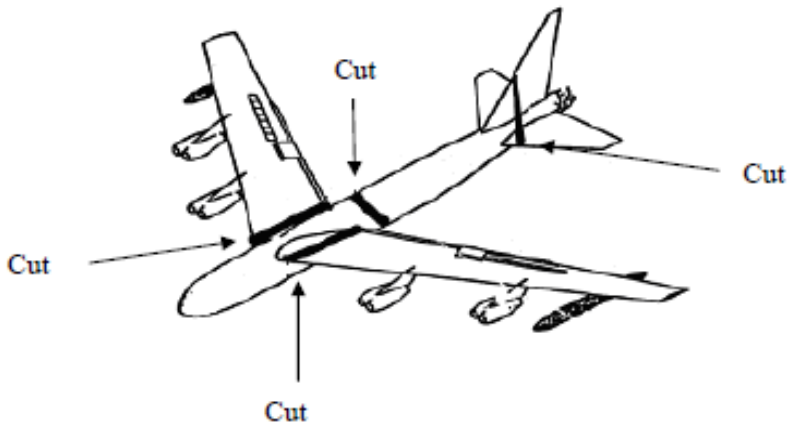

Figure 31. Attack Helicopter

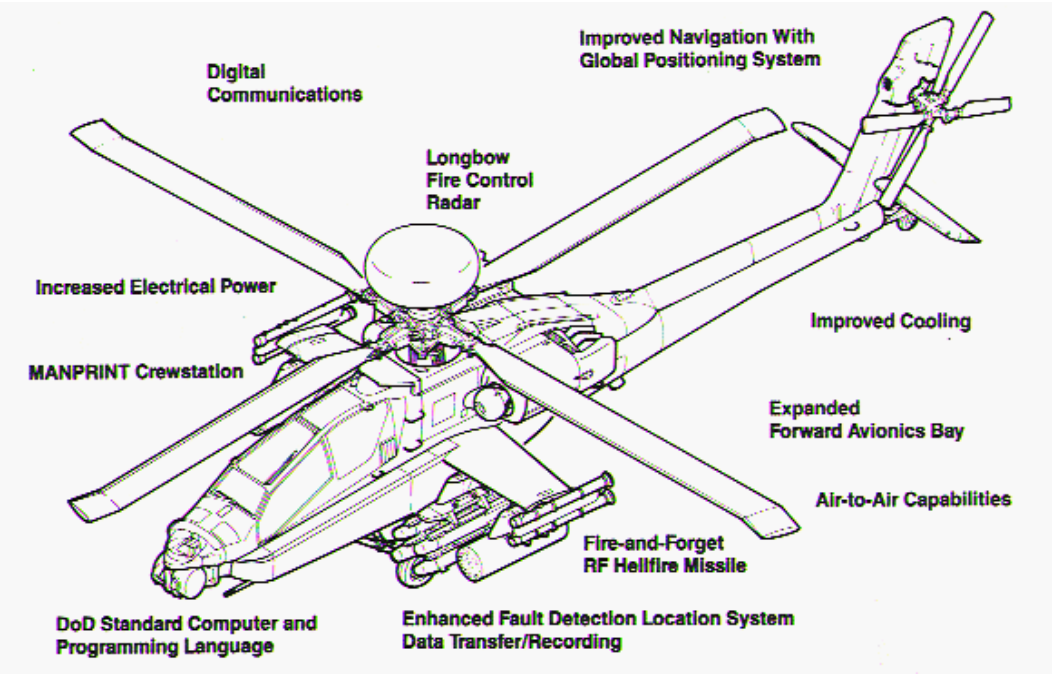

Figure 32. Aircraft Pylons and Pylon Parts

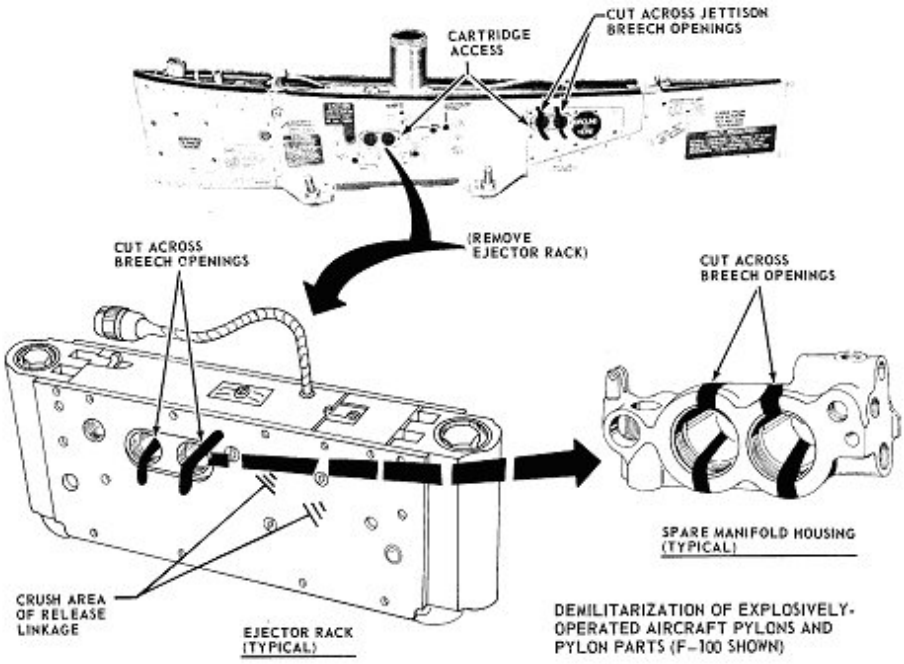

9. CATEGORY IX. MILITARY TRAINING EQUIPMENT AND TRAINING

a. DEMIL Code "D" Items. All DEMIL code "D" items shall be destroyed by cutting, burning, breaking, crushing, etc., as appropriate to preclude restoration for further use as an item or for identification and association of related parts. It is preferable to DEMIL all items to the level of scrap.

b. DEMIL Code "C" Key Point Items. DEMIL-required property from other categories of this appendix that are contained in training equipment are key points of the training equipment and require DEMIL. In Figure 33, the helmet and vision device and in Figure 34, the M16A1/A2, the recoil assembly and cable, the display console, and the remote control box are all key point items that fall under other categories in this appendix. All DEMIL code "C" items shall have the DEMIL required key points removed or destroyed in place. These key points themselves are assigned or treated as DEMIL code "D" items.

c. DEMIL Code "B" Items. MUT to the point of scrap worldwide to ensure items are unfit for their intended purpose by cutting, tearing, scratching, crushing, breaking, punching, shearing, burning, neutralizing, etc.

Figure 33. Aviation Combined Arms Tactical Trainer

Figure 34. Rifle Marksmanship Trainer Weaponeer

10. CATEGORY X. PROTECTIVE PERSONNEL EQUIPMENT AND SHELTERS

a. DEMIL Code "D" Items. All DEMIL code "D" items shall be destroyed by cutting, burning, breaking, crushing, etc., as appropriate to preclude restoration for further use as an item or for identification and association of related parts. It is preferable to DEMIL all items to the level of scrap.

b. DEMIL Code "C" Key Point Items. All DEMIL code "C" items shall have the DEMIL required key points removed or destroyed in place. These key points themselves are assigned or treated as DEMIL code "D" items.

c. DEMIL Code "E" Items. See existing instructions or request guidance using the DoD DEMIL Program Office contact information provided on the DoD DEMIL website at https://demil.osd.mil.

d. DEMIL Code "F" Items. See Enclosure 5 of Volume 2 of this Manual regarding the method to obtain special instructions.

e. DEMIL Code "B" Items. MUT to the point of scrap worldwide to ensure items are unfit for their intended purpose by cutting, tearing, scratching, crushing, breaking, punching, shearing, burning, neutralizing, etc.

11. CATEGORY XI. MILITARY ELECTRONICS

a. DEMIL Code "D" Items

(1) All DEMIL code "D" items shall be destroyed by cutting, burning, breaking, crushing, etc., as appropriate to preclude restoration for further use as an item or for identification and association of related parts. It is preferable to DEMIL all items to the level of scrap. Demanufacturing of military electronics shall be accomplished as described in paragraph 3 of Enclosure 3 of this Volume.

(2) Items that incorporate a TEMPEST application and are specifically designed for military use, shall be completely destroyed to preclude restoration as an item for its original function (this includes both entire end items and individual components, as applicable). If the TEMPEST application is to a commercially available item, the turn-in activity shall sanitize the equipment of all classified and/or sensitive data and software prior to turn-in to the disposal activity. The turn-in document shall be annotated that the item has TEMPEST application and has been sanitized prior to turn-in. These items shall then be considered Commerce Control List Items (CCLI) and incorporate all appropriate controls.

b. DEMIL Code "C" Key Point Items. All DEMIL code "C" items shall have the DEMIL required key points removed or destroyed in place. These key points themselves are assigned or treated as DEMIL code "D" items. Demanufacturing of military electronics shall be accomplished as described in paragraph 3 of Enclosure 3 of this Volume.

c. DEMIL Code "F" Items. See Enclosure 5 of Volume 2 of this Manual regarding the method to obtain special instructions.

d. DEMIL Code "B" Items. MUT to the point of scrap worldwide to ensure items are unfit for their intended purpose by cutting, tearing, scratching, crushing, breaking, punching, shearing,

burning, neutralizing, etc. Demanufacturing of military electronics shall be accomplished as described in paragraph 3 of Enclosure 3 of this Volume.

12. CATEGORY XII. FIRE CONTROL, RANGE FINDER, OPTICAL AND GUIDANCE, AND CONTROL EQUIPMENT. Any electronic components within this category shall be processed as in Category XI.

a. DEMIL Code "D" Items. Ensure that all lens or other optical components are completely destroyed. All DEMIL code "D" items shall be destroyed by cutting, burning, breaking, crushing, etc., as appropriate to preclude restoration for further use as an item or for identification and association of related parts. It is preferable to DEMIL all items to the level of scrap.

b. DEMIL Code "C" Key Point Items. Cutting, crushing, breaking, or melting IR nightsighting and viewing equipment to the degree required to preclude repair or restoration to original intended use. Personnel engaged in DEMIL of this material should be aware of possible presence of self-luminous radioactive sights and coatings on certain optics. DEMIL shall be performed only in accordance with procedures approved by local safety personnel. All DEMIL code "C" items shall have the DEMIL required key points removed or destroyed in place. These key points themselves are assigned or treated as DEMIL code "D" items.

c. DEMIL Code "B" Items. MUT to the point of scrap worldwide to ensure items are unfit for their intended purpose by cutting, tearing, scratching, crushing, breaking, punching, shearing, burning, neutralizing, etc.

13. CATEGORY XIII. AUXILIARY MILITARY EQUIPMENT

a. DEMIL Code "D" Items. All DEMIL code "D" items shall be destroyed by cutting, burning, breaking, crushing, etc., as appropriate to preclude restoration for further use as an item or for identification and association of related parts. It is preferable to DEMIL all items to the level of scrap.

(1) Armor Modules (Ceramic and/or Composite) and Armored Brackets

(a) Break the armor module external fabric and internal material into smaller pieces.

(b) After completing this preliminary crushing, separate the armor module metal components and dispose of the metal components as scrap.

(c) Process remaining armor module into unrecognizable rubble and/or particles.

(2) Specialized Camouflage Netting. Specialized camouflage netting as shown in Figure 35 shall be demilitarized by cutting into pieces no bigger than 4 x 4 inches, shredding, burning, or by burying in a Government-approved landfill.

Figure 35. Specialized Camouflage Netting

b. DEMIL Code "C" Key Point Items. All DEMIL code "C" items shall have the DEMIL required key points removed or destroyed in place. These key points themselves are assigned or treated as DEMIL code "D" items.

c. DEMIL Code "G" Items. Technical instructions shall be furnished by the Military Services having overall knowledge and responsibility for disposal of the material.

d. DEMIL Code "F" Items. See Enclosure 5 of Volume 2 of this Manual regarding the method to obtain special instructions.

e. DEMIL Code "B" Items. MUT to the point of scrap worldwide to ensure items are unfit for their intended purpose by cutting, tearing, scratching, crushing, breaking, punching, shearing, burning, neutralizing, etc.

14. CATEGORY XIV. TOXICOLOGICAL AGENTS, INCLUDING CHEMICAL AGENTS, BIOLOGICAL AGENTS, AND ASSOCIATED EQUIPMENT

a. DEMIL Code "D" Items. M8 and M9 Chemical defense paper DEMIL may be accomplished by methods such as shredding, incineration, or burying in a landfill. All DEMIL code "D" items shall be destroyed by cutting, burning, breaking, crushing, etc., as appropriate to preclude restoration for further use as an item or for identification and association of related parts. It is preferable to DEMIL all items to the level of scrap.

b. DEMIL Code "C" Key Point Items. All DEMIL code "C" items shall have the DEMIL required key points removed or destroyed in place. These key points themselves are assigned or treated as DEMIL code "D" items.

c. DEMIL Code "G" Items. Disposal of chemical weapons and materials is accomplished by the U.S. Army Chemical Materials Agency (CMA). (See http://www.cma.army.mil for additional information related to the CMA). Disposal of chemical, biological, radiological, and

nuclear-defense equipment throughout the DoD is accomplished by the Joint Equipment Assessment Program (JEAP). (See http://www.jpeocbd.osd.mil/packs/Default.aspx?pg=60 for additional information related to the JEAP).

d. DEMIL Code "F" Items. See Enclosure 5 of Volume 2 of this Manual regarding the method to obtain special instructions.

e. DEMIL Code "B" Items. MUT to the point of scrap worldwide to ensure items are unfit for their intended purpose by cutting, tearing, scratching, crushing, breaking, punching, shearing, burning, neutralizing, etc.

15. CATEGORY XV. SPACECRAFT SYSTEMS AND ASSOCIATED EQUIPMENT

a. DEMIL Code "D" Items. All DEMIL code "D" items such as shown in Figure 36 shall be destroyed by cutting, burning, breaking, crushing, etc., as appropriate to preclude restoration for further use or for identification and association of related parts.

b. DEMIL Code "C" Key Point Items. All DEMIL code "C" items shall have the DEMIL required key points removed or destroyed in place. These key points themselves are assigned or treated as DEMIL code "D" items. These may include many of the key points identified in Figure 37.

c. DEMIL Code "B" Items. MUT to the point of scrap worldwide to ensure items are unfit for their intended purpose by cutting, tearing, scratching, crushing, breaking, punching, shearing, burning, neutralizing, etc.

Figure 36. Satellite Signals Navigation Set

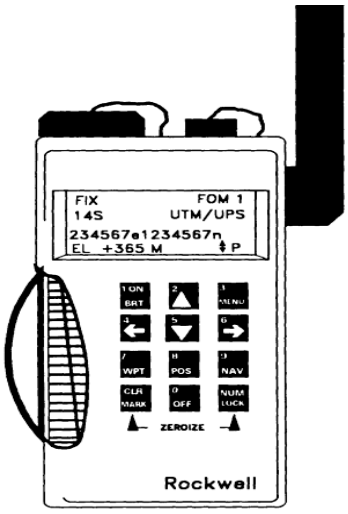

Figure 37. Interim Ground Station Module

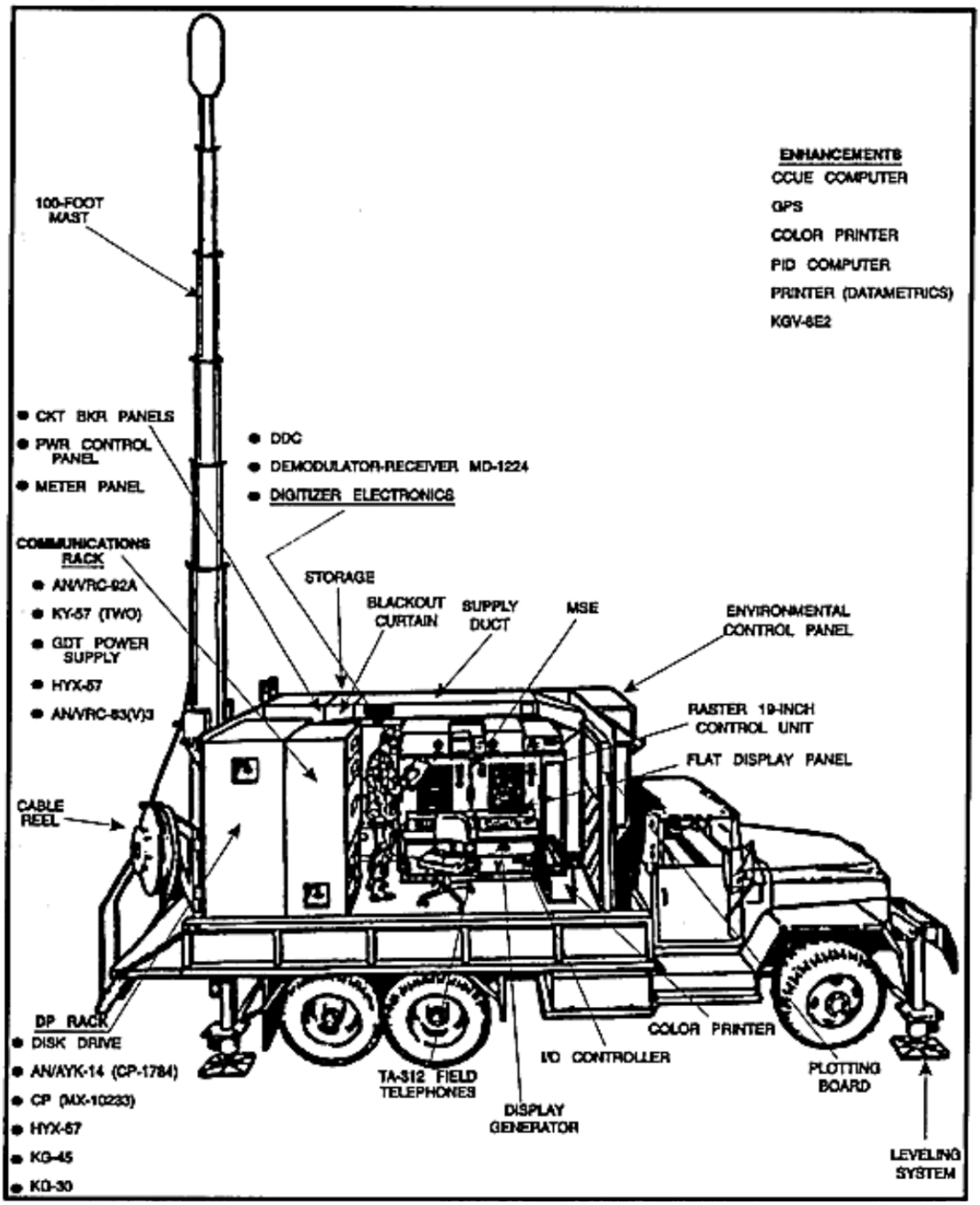

16. CATEGORY XVI. NUCLEAR WEAPONS, DESIGN AND TESTING RELATED ITEMS

a. DEMIL Code "D" Items. All DEMIL code "D" items shall be destroyed by cutting, burning, breaking, crushing, etc., as appropriate to preclude restoration for further use as an item

or for identification and association of related parts. It is preferable to DEMIL all items to the level of scrap.

b. DEMIL Code "C" Key Point Items. All DEMIL code "C" items shall have the DEMIL required key points removed or destroyed in place. These key points themselves are assigned or treated as DEMIL code "D" items.

c. DEMIL Code "F" Items. See Enclosure 5 of Volume 2 of this Manual regarding the method to obtain special instructions.

d. DEMIL Code "B" Items. MUT to the point of scrap worldwide to ensure items are unfit for their intended purpose by cutting, tearing, scratching, crushing, breaking, punching, shearing, burning, neutralizing, etc.

17. CATEGORY XVII. CLASSIFIED ARTICLES, TECHNICAL DATA AND DEFENSE SERVICES NOT OTHERWISE ENUMERATED. See Enclosure 5 of Volume 2 of this Manual for information related to DEMIL code "P" items.

18. CATEGORY XVIII. DIRECTED ENERGY WEAPONS

a. DEMIL Code "D" Items. All DEMIL code "D" items shall be destroyed by cutting, burning, breaking, crushing, etc., as appropriate to preclude restoration for further use as an item or for identification and association of related parts. It is preferable to DEMIL all items to the level of scrap.

b. DEMIL Code "C" Key Point Items. All DEMIL code "C" items shall have the DEMIL required key points removed or destroyed in place. These key points themselves are assigned or treated as DEMIL code "D" items.

c. DEMIL Code "B" Items. MUT to the point of scrap worldwide to ensure items are unfit for their intended purpose by cutting, tearing, scratching, crushing, breaking, punching, shearing, burning, neutralizing, etc.

19. CATEGORY XIX. This category does not currently have any items assigned to it by the Department of State (DoS) and is designated as reserved.

20. CATEGORY XX. SUBMERSIBLE VESSELS, OCEANOGRAPHIC AND ASSOCIATED EQUIPMENT

a. DEMIL Code "D" Items. All DEMIL code "D" items shall be destroyed by cutting, burning, breaking, crushing, etc., as appropriate to preclude restoration for further use as an item

or for identification and association of related parts. It is preferable to DEMIL all items to the level of scrap.

b. DEMIL Code "C" Key Point Items. All DEMIL code "C" items shall have the DEMIL required key points removed or destroyed in place. These key points themselves are assigned or treated as DEMIL code "D" items.

c. DEMIL Code "B" Items. MUT to the point of scrap worldwide to ensure items are unfit for their intended purpose by cutting, tearing, scratching, crushing, breaking, punching, shearing, burning, neutralizing, etc.

21. CATEGORY XXI. MISCELLANEOUS ARTICLES. See Table 23 of Volume 2 of this Manual for information related to this category.

ENCLOSURE 4

DISPOSITION

1. INTRODUCTION. DEMIL requirements are accomplished in conjunction with disposition decisions. (See the appendix to this enclosure for types of property that have special processing considerations). More information on turn-in procedures as well as disposition requirements is specified in Reference (f).

2. REPORTING EXCESS PROPERTY

a. Materiel Excess Property Identification and Screening. Property needs to be positively identified using resources such as property accountability records, Federal Logistics Information System Web Inquiry (WebFLIS), and Federal Logistics Data (FEDLOG). (See DoD Manual 4140.01 (Reference (o)) and Defense Logistics Manual 4000.25-1 (Reference (p)) for materiel returns.) In addition, internal Military Department screening must be accomplished before an excess determination can be made.

b. Property DLA Disposition Services Does Not Physically Accept. DLA Disposition Services does not accept:

(1) DEMIL code “G” items unless certified as material documented as safe (MDAS) per the sample format in Figure 38.

(2) Items without an inert certificate as shown in the sample format in Figure 39. These items include, but are not limited to:

(a) Small Arms and Light Weapons (complete weapon)

(b) Barrel assembly and upper receiver

(c) Ammunition pouches/ outer tactical vests/individual load-bearing equipment/modular lightweight load carrying equipment (MOLLE)

(d) Ammunition magazines and clips

(e) Bandoleers and ammunition belts

(3) DEMIL code “P” items without DEMIL and declassification certificates per Figures 1 and 2.

Figure 38. Sample Format of a Material Documented As Safe (MDAS) Certificate

Title:	**Material Documented As Safe (MDAS) Certificate**
Requirements:	The explosives safety status of material potentially presenting an explosive hazard (MPPEH) shall be determined by one of two methods: (a) 100-percent visual inspection and an independent 100-percent re-inspection by qualified personnel or (b) processing by a DoD Explosives Safety Board (DDESB)-approved method with appropriate post-processing inspection (e.g., sampling, etc.) of the material A certification/verification statement as shown shall be signed and dated by a DoD contracted person or a Government employee. This documentation is only valid if the material listed is properly segregated and secured, and the chain-of-custody is maintained until the material's release from DoD control.

Disposal Turn-In Document:	QTY:
National Stock Number or Description:	

Certification Statement:

The material listed on this form has been inspected or processed by DDESB-approved means, as required by DoD policy, and to the best of my knowledge and belief does not pose an explosive hazard.

Signature:_____

Date_____

Printed Name/Position (Grade/Rank): _____

Organization and Address: _____

Phone (COM/DSN/FAX)/E-Mail Address: _____
==========

Signature:_____

Date_____

Printed Name/Position (Grade/Rank): _____

Organization and Address: _____

Phone (COM/DSN/FAX)/E-Mail Address: _____
==========

Recommend this material be released for: (check all that apply)
_____ Recycling
_____ Unrestricted Use
_____ Disposal
_____ Other

(Describe):_____

Reference:	DoDI 4140.62, "Management and Disposition of Material Potentially Presenting an Explosive Hazard", current edition

Figure 39. Sample Format of an Inert Certificate

Title:	**Inert Certificate**
Type of Property includes but is not limited to:	1. Small Arms and Light Weapons (complete weapon) 2. Barrel assembly and upper receiver 3. Ammunition pouches/ outer tactical vests/Individual load-bearing equipment/modular lightweight load carrying equipment 4. Ammunition magazines and clips 5. Bandoleers and ammunition belts 6. Wholly Inert Items (e.g., Dummy munitions)
Requirements:	The generating activity shall ensure that this property is properly inspected to determine the presence or absence of explosive hazards prior to referral to the DLA Disposition Services site or release from DoD control. The personnel certifying and verifying the inspection shall certify on the DD Form 1348-1A. The certification requires dual signatures (certifier, verifier) and printed full name, rank/rate, organization name and address, and phone number (commercial and DSN) of the personnel that certified and verified the inspection**.**

Disposal Turn-In Document (DTID):	QTY:
National Stock Number or Description:	

Certification Statement:

The property associated with this DTID has been inspected by the Certifier and independently re-inspected by the Verifier and to the best of our knowledge is free of materiel potentially presenting an explosive hazard).

Signature (Certifier):_____Date_____

Printed Name/Grade/Rank: _____

Title: _____

Phone (COM/DSN/FAX): _____

Address: _____

_____

==========

Signature (Verifier):_____Date_____

Printed Name/Grade/Rank: _____

Title: _____

Phone (COM/DSN/FAX): _____

Address: _____

_____

Reference:	DoD Manual 4160.21, "Defense Materiel Disposition Manual," current edition

(4) DEMIL code "F" items without instructions. DEMIL code "F" instructions must be posted on the Army Electronic Product Support Network in accordance with Volume 2 of this Manual.

c. DoD Excess Reporting to General Services Administration (GSA). DEMIL codes "B", "C", "D", "E", "F", "G", "P", and sensitive "Q" personal property are ineligible for DoD excess reporting to the GSA in accordance with Reference (f), without demonstrated positive property accountability and a closed loop system that ensures return of such property to the DoD when no longer needed. This includes:

(1) Transfer screening of excess by other Federal agencies.

(2) Loans or donation screening of surplus by State agencies for surplus property and other eligible donation recipients.

d. Disposal Turn-In Document (DTID) (DD Form 1348-1A). For all material, the turn-in activity shall annotate each DTID with the DEMIL code or with a clear text statement for local stock numbers (LSNs). Disposal activities shall not accept any property unless the DD Form 1348-1A contains the official DEMIL code as recorded in the Federal Logistics Information System, such as FEDLOG or WebFLIS. Instructions on filling out the DTID are located in Reference (f).

e. Inaccurate DEMIL Code. Turn-in activities are responsible for reporting accurate DEMIL codes. Disposal activities shall challenge DEMIL codes that are considered or suspected to be in error according to Enclosure 4 to Volume 2 of this Manual.

f. Contractor Inventory. Contractors shall report DoD personal property in accordance with the terms and conditions of the accountable contract.

3. TYPES OF DISPOSITION

a. Reutilization

(1) DoD. DEMIL or mutilation (MUT) is not required for property that is reutilized within the DoD.

(2) DoD Special Programs. The title to DEMIL code "B", "C", "D", "E", "F", "G", and sensitive "Q" personal property shall not transfer to special programs. DoD personal property that requires DEMIL or MUT shall not be provided to special programs without demonstrated positive property accountability.

b. Transfer. DoD personal property that requires DEMIL or MUT is not eligible for release to transfer customers including the GSA without demonstrated positive property accountability. The DEMIL requirement is identified by an assigned DEMIL code of "C", "D", "E", "F", "G", or "P". The MUT requirement is identified by an assigned DEMIL code of "B" or a sensitive

DEMIL code of "Q." Other Federal agencies (OFAs) are considered transfer customers through the GSA. The title to DEMIL or MUT-required DoD personal property shall not transfer to OFAs. OFAs who obtain DoD personal property shall perpetuate the DEMIL codes in their property accountability records. Additionally, Federal and State agencies shall conform to Reference (f) as applicable.

c. Donation. Donation of DEMIL code "B," "C," "D," "E," "F," "G," and "P" and sensitive DEMIL code "Q" property is not authorized unless positive accountability, control, and end-use monitoring is established and verifiable through the DoD. Minimum and limited DEMIL of such items shall be accomplished to render the items unserviceable in the interest of public safety and shall preserve the intrinsic, historical, or display value of the property for use in approved museums. Instructions for limited DEMIL shall be provided by the donating agency. Final DEMIL must always be accomplished on partially demilitarized and modified items prior to final disposition. DoD property on the Commerce Control List (CCL) must conform to the requirements of DoDI 2030.08 (Reference (q)). The DoD Component making the donation is responsible for determining the current status of the items donated under these provisions on an annual basis. Unauthorized disposition or use by the recipient shall be immediately reported to the applicable security activity of the DoD Component in accordance with DoDI 4140.01 (Reference (r)). (See Reference (f) for additional information.)

d. Service Educational Activities (SEA). An SEA, with the expressed approval of the school administration, GSA, and the DoD may only obtain DoD property that promotes the vocational program of the school. DEMIL code "B," "C," "D," "E," "F," "G," and "P" and sensitive DEMIL code "Q" property is not authorized.

e. Sales. Certified and verified DEMIL and MUT to the point of scrap needs to be accomplished as applicable prior to sale or as a condition of sale in accordance with this Manual.

4. EXCHANGE AND/OR SALE OF DoD PERSONAL PROPERTY

a. The exchange and/or sale of Munitions List Item (MLI) and/or CCLI must comply with Reference (o), Reference (q), parts 101 and 102 of title 41, CFR (Reference (s)), and the provisions of this Manual.

b. The exchange and/or sale of MLI requiring DEMIL must be granted a waiver prior to release. Waiver of the DEMIL requirements of this Manual is not assumed and may be granted on a case-by-case basis by the DDPM. (See Volume 1 of this Manual for additional information regarding waivers.)

c. DoD USML or CCL personal property shall not be released to any person or entity that is ineligible to obtain a DoS, Department of Commerce (DoC), or Office of Foreign Assets Control export license.

5. SPECIAL AND SECURITY ASSISTANCE PROGRAMS. Special and security assistance programs are identified in Reference (f). DEMIL-required property shall not be released unless specifically authorized by the Department of Defense pursuant to legal authority

a. Foreign Military Sales. Material released to foreign governments shall be in accordance with References (e), (f), (g), (q), and this Manual; and managed by the DSCA.

b. Law Enforcement Support. Material released to law enforcement agencies, both State and Federal, shall be considered a loan only. This material, with the exception of released DEMIL code "A" property, shall be returned to the DoD for disposition when no longer required. (See sections 2576 and 2576a of Reference (h) for additional information.)

c. Firefighting Support. Material released to State firefighting agencies through the DoD Firefighters Property Program is considered a loan. This material, with the exception of released DEMIL code "A" property, shall be returned to the DoD for final disposal. (See Reference (h) for additional information.)

6. MATERIAL WITHOUT A NATIONAL STOCK NUMBER

a. LSN DEMIL Codes and Clear Text Statement. For other than supply system items and/or for LSN items, if the appropriate DEMIL codes for the items cannot be determined, turn-in activities shall enter on the DTID an appropriate clear text statement describing the DEMIL requirement and an appropriate and corresponding DEMIL code. For further instructions on assigning DEMIL codes, see Volume 2 of this Manual.

b. LSN Turn-in. (See Reference (f) for requirements.)

Appendix
Property Requiring Special Processing

APPENDIX TO ENCLOSURE 4

PROPERTY REQUIRING SPECIAL PROCESSING

1. AIRCRAFT. (See Reference (f) and Category VIII of the Appendix to Enclosure 3 for additional information related to aircraft.) Aircraft that require DEMIL shall not be reported to GSA for transfer, donation, or sale except as scrap. F-14 aircraft processing requires:

a. Destruction of all excess F-14 unique items.

b. A one-time reutilization of F-14 common items within the DoD only.

c. Destruction of remaining F-14 common items after completion of the one-time reutilization.

2. AIRCRAFT PYLONS, FUEL TANKS, LAUNCHERS, AND EJECTOR/RELEASE RACKS. See Reference (f) and Category VIII of the Appendix to Enclosure 3 for relevant information.

3. AIRCRAFT SCRAP ALUMINUM. See Reference (f) and Category VIII of the Appendix to Enclosure 3 for relevant information.

4. AE. See Reference (n) and Volume 2 of this Manual for additional information regarding AE.

a. AE cannot be transferred to a DLA Disposition Services site until it has been inspected and certified as MDAS. Certification requirements are identified in Figure 38. See Reference (f) for information related to transferring material to a DLA Disposition Services site.

b. See related information in this appendix in section 23 for expended small arms cartridge casing (ESACC) and section 31 for material potentially presenting an explosive hazard (MPPEH).

5. ARMORED VEHICLE PERISCOPES. See Reference (f) and Categories VII and XII of the Appendix to Enclosure 3 for relevant information.

6. BARREL ASSEMBLY. See Reference (f) and Category I of the Appendix to Enclosure 3 for relevant information. These items require an inert certificate per Figure 39.

7. BATCH LOTS. DEMIL required property shall not be submitted in batch lots. DEMIL required items must be turned in as single line items.

8. CAMOUFLAGE NETTING. See Reference (f) and Category XIII of Enclosure 3 for relevant information.

9. CANISTER AND FILTER ELEMENTS FOR CHEMICAL, BIOLOGICAL, RADIOLOGICAL, AND NUCLEAR EQUIPMENT, INDIVIDUAL PROTECTION. See Category XIV of the Appendix to Enclosure 3 for relevant information and, for CE/C2 CANISTERS, see Reference (f).

10. CANNON TUBES. (See Reference (f) and Category II of the Appendix to Enclosure 3 for relevant information.) These items require an inert certificate per Figure 39.

11. CHAFF. (See Reference (f) and Category XIII of the Appendix to Enclosure 3 for relevant information.) These items require an MDAS certificate per Figure 38.

12. CHEMICAL AGENT RESISTANT COATING. See Reference (f) and Category XIV of the Appendix to Enclosure 3 for relevant information.

13. CHEMICAL DEFENSE EQUIPMENT. See Reference (f) and Category XIV of the Appendix to Enclosure 3 for relevant information.

14. CHEMICAL DEFENSE PAPER, M8 AND M9 TYPES. See Reference (f) and Category XIV of the Appendix to Enclosure 3 for relevant information.

15. CHEMICAL WEAPONS. CMA safely stores and destroys aging chemical weapons while working toward the effective assessment, treatment, and ultimate elimination of the nation's chemical warfare materiel. (See http://www.cma.army.mil, and Category XIV of the Appendix to Enclosure 3 for relevant information.)

16. CLASSIFIED COMMUNICATIONS SECURITY ITEMS , CRYPTOLOGIC ITEMS, AND CONTROLLED CRYPTOGRAPHIC ITEMS (CCI). See Volume 2 of this Manual related to DEMIL code "P" items, table 61 of DoD Manual 4100.39 (Reference (t)) for Controlled Inventory Item Codes, and Category XIII of the Appendix to Enclosure 3 for non-classified cryptologic items.

17. COMMUNICATION SHELTERS. See Reference (f) and Category X of the Appendix to Enclosure 3 for relevant information.

18. COMPOSITE FIBER/CARBON COMPOSITE FIBER MATERIEL/PROPERTY. See Reference (f), Category VIII of the Appendix to Enclosure 3 for aircraft, and Category X of the Appendix to Enclosure 3 for clothing and/or body armor.

19. CONTRACTOR INVENTORY. See Enclosure 3 for relevant information.

20. DISTRESS SIGNALING DEVICES. See Reference (f) and Category I of the Appendix to Enclosure 3 for relevant information.

21. EJECTION SEATS. (See Reference (f) and Category VIII of the Appendix to Enclosure 3 for relevant information.) These items require an MDAS certificate per Figure 38.

22. ELECTRON TUBES. See Reference (f) and Category XI of the Appendix to Enclosure 3 for relevant information.

23. ESACC. Cases up to .50 caliber (12.7mm), inclusive, shall be treated as non-sensitive DEMIL code "Q" subject to TSC. See Volume 2 of this Manual for information related to DEMIL code "Q." These items require an MDAS certificate per Figure 38. Also see section 4 of this appendix for AE and section 31 of this appendix for MPPEH related information.

24. FLIGHT SAFETY CRITICAL AIRCRAFT PARTS/CRITICAL SAFETY ITEM. See Reference (f) for relevant information.

25. GLOBAL POSITIONING SYSTEM. See Reference (f) and Category XV of the Appendix to Enclosure 3 for relevant information.

26. HARD TARGETS. Tanks, vehicles, aircraft, and other articles covered under various categories in Volume 2 of this Manual and utilized as hard targets, must be demilitarized in accordance with Volume 3 of this Manual. Damage sustained to an article used as a hard target does not necessarily constitute DEMIL. Destruction must, at a minimum, satisfy the provisions of the Appendix to Enclosure 3. These items require an MDAS certificate per Figure 38.

27. HELICOPTER BLADES AND TAIL ROTORS. See Reference (f) and Category VIII of the Appendix to Enclosure 3 for relevant information.

28. HELMETS, AIRCRAFT, AND COMBAT VEHICLE CREW. See Reference (f) and Category X of the Appendix to Enclosure 3 for relevant information.

29. HYDROPNEUMATIC RECOIL MECHANISM/HYDROPNEUMATIC EQUILIBRATOR. See Reference (f) and Category II of the Appendix to Enclosure 3 for relevant information.

30. MAPS, CHARTS, AND GEODESIC PRODUCTS. Maps, charts, and geodesic products may have LIMITED DISTRIBUTION controls. Such material shall be destroyed in accordance with DoDI 5030.59 (Reference (u)).

31. MPPEH

a. MPPEH is a designation for material that may contain explosive hazards and is addressed by Reference (m). Examples of MPPEH material are expended ammunition rounds that in an unexpended state were classified as DEMIL code "G" and munitions containers that are not DEMIL code "G" but could still hold an explosive item.

b. MPPEH cannot be transferred to a DLA Disposition Services site until it has been inspected in accordance with Reference (m), certified as MDAS per Figure 38, and assigned an LSN. See Reference (f) for information related to transferring material to DLA Disposition Services site.

c. See related information in this appendix in section 4 for AE and section 23 for ESACCs.

32. MILITARY COMBAT CLOTHING AND INDIVIDUAL EQUIPMENT. Excess military combat uniforms may require an inert certificate per Figure 39 and will be destroyed by incineration. (See Reference (f) and Category X of the Appendix to Enclosure 3 for relevant information.)

33. NAVY SHIPS

a. The Naval Sea Systems Command's Program Executive Office (PEO) Ships manages acquisition and complete life cycle support for all U.S. Navy non-nuclear surface ships. These ships range from combatants to amphibious ships to supply and replenishment cargo ships. For these and all other non-nuclear surface craft, PEO Ships maintains "cradle to grave" responsibility. At the end of a ship's life, PEO Ships manages formal decommissioning from the Fleet and, in some cases, transfers or sells ships to friendly foreign navies. When a ship is not

transferred or sold, PEO Ships manages its inactivation and safe disposition through the Navy Inactive Ships Program (PMS-333). (See http://www.navsea.navy.mil/teamships/Inactiveships/default.aspx and http://acquisition.navy.mil/programs.)

b. All U.S. Navy decommissioned nuclear submarines and carriers are disposed of by PEO Submarines and PEO Carriers respectively.

34. NIGHT VISION EQUIPMENT (NVE)

a. See Reference (f), export control classification numbers (ECCNs) 6A002, 6A003, 6E001, and 6E002 of Reference (k), and Category XII of the Appendix to Enclosure 3 for relevant information.

b. NVE containing low-level radioactive components, which are discussed in DoD 4715.6-R (Reference (v)), are not authorized for physical transfer to a DLA Disposition Services site. Disposal of NVE shall be managed according to guidance in Reference (f).

35. NUCLEAR PROPULSION PLANT MATERIEL. All matters pertaining to the Navy Nuclear propulsion plants are handled by the Director, Naval Nuclear Propulsion Program. (See Reference (f) and Categories VI and XX of the Appendix to Enclosure 3 for relevant information.)

36. NUCLEAR WEAPONS/ORDNANCE MATERIEL. See Reference (f) and Category XVI of the Appendix to Enclosure 3 for relevant information.

37. NUCLEAR WEAPONS RELATED MATERIEL (NWRM). See the Under Secretary of Defense for Acquisition, Technology, and Logistics Memorandum (Reference (w)) for relevant information on NWRM.

38. PARACHUTES (PERSONNEL AND CARGO). (See Reference (f) and Category VIII of the Appendix to Enclosure 3 for relevant information.) These items may require an MDAS certificate per Figure 38.

39. SCRAP. Intact or recognizable USML and/or CCLIs, components, and parts are not considered scrap. All USML and/or CCLIs must be rendered useless beyond repair, rehabilitation, or restoration to remove any defensive or offensive capability and any recognition characteristics of the item before being considered recyclable, waste, or discarded material.

40. SA/LW

a. DEMIL Centers designated by DLA Disposition Services are the preferred agents for the DEMIL of SA/LW in accordance with Volume 3 of this Manual when directed and authorized by the primary inventory control activity (PICA). The PICA may authorize the secondary inventory control activity to DEMIL SA/LW and turn-in DEMIL residue to the DLA Disposition Services with the DEMIL certificate. These items require an inert certificate per Figure 39. (See chapter 5 of Reference (o), DoD Manual 5100.76 (Reference (x)), and section 53 of title 26, United States Code (Reference (y)) for related information.)

b. SA/LW processing must comply with the physical security requirements of Reference (x), part II of DTR 4500.9-R (Reference (z)) and the DoD Small Arms/Light Weapons Serialization Program as described in Defense Logistics Manual 4000.25-2 (Reference (aa)).

41. SMOKE POTS (EXPENDED). (See Reference (f) and Category V of the Appendix to Enclosure 3 for relevant information.) These items require an MDAS certificate per Figure 38.

42. SPECIAL TOOLING AND SPECIAL TEST EQUIPMENT (ST/STE). (See the Appendix to Enclosure 3 for relevant information.) The DoD may screen for reutilization of material, equipment, and ST/STE that is MLI within the DoD in accordance with subpart 45.602 of Reference (i).

a. ST/STE typically does not receive a NSN so the contractor must provide clear detailed identification of ST/STE when reporting on inventory disposal schedules.

b. Unclear identification of ST/STE may result in the unauthorized release or abandonment of sensitive property. Plant clearance officers will not accept inventory disposal schedules that do not contain clear identification and will return them to the contractor for correction.

43. STARTER GUNS. (See Reference (f), Category I of the Appendix to Enclosure 3, and part 478 of title 27, CFR (Reference (ab) for relevant information.) These items require an inert certificate per Figure 39.

44. STRATEGIC AND CRITICAL MATERIELS. See Reference (f) for relevant information.

45. SUBMARINE ESCAPE APPLIANCES. See Reference (f) and Category VI of the Appendix to Enclosure 3 for relevant information.

46. SUBSAFE PROPERTY. See Reference (f) and Category VI of the Appendix to Enclosure 3 for relevant information.

47. SURVIVAL AND PROTECTIVE EQUIPMENT. See Reference (f) and Category X of the Appendix to Enclosure 3 for relevant information.

48. TECHNICAL PUBLICATIONS. See Reference (f) and all categories in the Appendix to Enclosure 3 for relevant information.

49. TEMPEST TECHNOLOGY ITEMS/EQUIPMENT. See Reference (f) and Category XI of the Appendix to Enclosure 3 for relevant information.

50. TRAINING EQUIPMENT. (See Hard Targets in section 26 of this appendix, and Category IX of the Appendix to Enclosure 3 for relevant information.) Additional information on training aids and target requirements can be found in Reference (f).

51. UNIFORM CLOTHING STORES AND MILITARY EXCHANGE SERVICE STORES. Uniform clothing stores and military exchange service stores shall not be allowed to sell DEMIL required property.

52. VEHICLES. See Reference (f), Category VII and Category XIII of the Appendix to Enclosure 3 for armor, and ECCN 9A018 of Reference (k).

GLOSSARY

PART I. ABBREVIATIONS AND ACRONYMS

AE	ammunition and explosives
CCI	Controlled Cryptographic Items
CCL	Commerce Control List
CCLI	Commerce Control List Item
CMA	Chemical Materials Agency
CFR	Code of Federal Regulations
DDESB	DoD Explosives Safety Board
DDPM	DoD DEMIL Program Manager
DEMIL	Demilitarization
DoDD	DoD Directive
DLA	Defense Logistics Agency
DoC	Department of Commerce
DoDI	DoD Instruction
DSCA	Defense Security Cooperation Agency
DTID	disposal turn-in document
ECCN	export control classification numbers
ESACC	expended small arms cartridge casing
FEDLOG	Federal Logistics Data
GSA	General Services Administration
IR	infrared
JEAP	Joint Equipment Assessment Program
LSN	local stock number
MLI	Munitions List Item
MDAS	material documented as safe
MOLLE	Modular Lightweight Load Carrying Equipment
MPPEH	material potentially presenting an explosive hazard
MUT	mutilation
NSN	National Stock Number
NVE	night vision equipment
NWRM	nuclear weapons related materiel

OFA	other Federal agencies
PEO	Program Executive Office
PICA	Primary Inventory Control Activity
SA/LW	small arms and light weapons
SCO	Security Cooperation Organization
SEA	Service Educational Activities
SMCA	Single Manager for Conventional Ammunition
ST/STE	special tooling and special test equipment
TSC	Trade Security Controls
USML	U.S. Munitions List
WebFLIS	Federal Logistics Information System Web Inquiry

PART II. DEFINITIONS

Unless otherwise noted, these terms and their definitions are for the purposes of this Volume.

AE. Defined in DoD 6055.09-M (Reference (ac)).

biological agents. Defined in the DoD Dictionary of Military and Associated Terms (Reference (ad)).

CCI. A secure telecommunications or information handling equipment ancillary device, or associated cryptographic component, that is unclassified but controlled. Equipments and components so designated bear the designator "Controlled Cryptographic Item" or "CCI."

CCL. A list of dual-use items under the export control jurisdiction of the BIS, U.S. DoC. See part 772 of Reference (k).

CCLI. An item or material found on the CCL. See part 774 of Reference (k).

chemical agents. Defined in Reference (ad).

contractor inventory. Contractor inventory includes any MLI and CCLI property acquired by and in the possession of a contractor or subcontractor under a contract for which title is vested in the Government and which exceeds the amounts needed to complete full performance under the entire contract.

conventional ammunition. Defined in Reference (g).

DEMIL. The act of eliminating the functional capabilities and/or inherent military design features from DoD personal property. Methods and degree range from removal and destruction

of critical features to total destruction by cutting, crushing, shredding, melting, burning, etc. DEMIL is required to prevent property from being used for its originally intended purpose and to prevent the release of inherent design information that could be used against the United States. DEMIL applies to material in serviceable and unserviceable condition.

DEMIL Code. A code assigned to DoD personal property. It indicates the degree of required physical destruction, identifies items requiring specialized capabilities or procedures, and identifies items that do not require DEMIL but may require TSC. It is used throughout the life-cycle to identify control requirements required before release of DoD personal property from DoD control.

disposal. Defined in Reference (f).

DoD excess. Defined in Reference (f).

domestic excess. Defined in Reference (f).

excess personal property. Defined in Reference (f).

foreign excess personal property. Defined in Reference (f).

key points (for DEMIL). The parts, components, alignment points, attachment fittings or areas which, when demilitarized, cannot feasibly be repaired, restored, replaced, improvised or commercially procured and which are necessary factors in restoring the next higher assembly to design capability.

MDAS. Defined in Reference (m).

MPPEH. Defined in Reference (m).

NWRM. Defined in the Reference (w).

SCO. Defined in Reference (e).

scrap. Defined in Reference (q).

small arms. Defined in Reference (f).

technical data. Defined in parts 120-130 of title 22, CFR (Reference (ae)).

TEMPEST. Defined in Reference (ad).

TSC. Defined in Reference (q).

wholly inert. Defined in Reference (ac).